ALPINA

AT3 98 HA (2022)

2T0610404/A22

Spare parts list
Reservdelar
Repuestos
Ersatzteile
Pièces détachées
Reserve onderdelen
Catalogo ricambi

● Use ST. S.p.A. Genuine Spare Parts specified in the parts list for repair and/or replacement.
● The contents described in the parts list may change due to improvement.
● The drawings of the spare parts are only indicative And might Not represent the part in question exactly.
● The indications "right" - "left" - "front" - "rear" refer to the position of the operator when using the machine.
● When placing orders of parts for repair And/Or replacement, make sure that the illustrated parts list Is the one applying to the machine's year of manufacture, as shown on the identification plate attached to the machine.

All rights reserved. No part Of this material may be reproduced Or transmitted, in any form Or by any means, electronic Or mechanical, including photocopying, recording Or by any information storage And retrieval system, without permision in writing from ST. S.p.A.

Copyright ST. S.P.A.

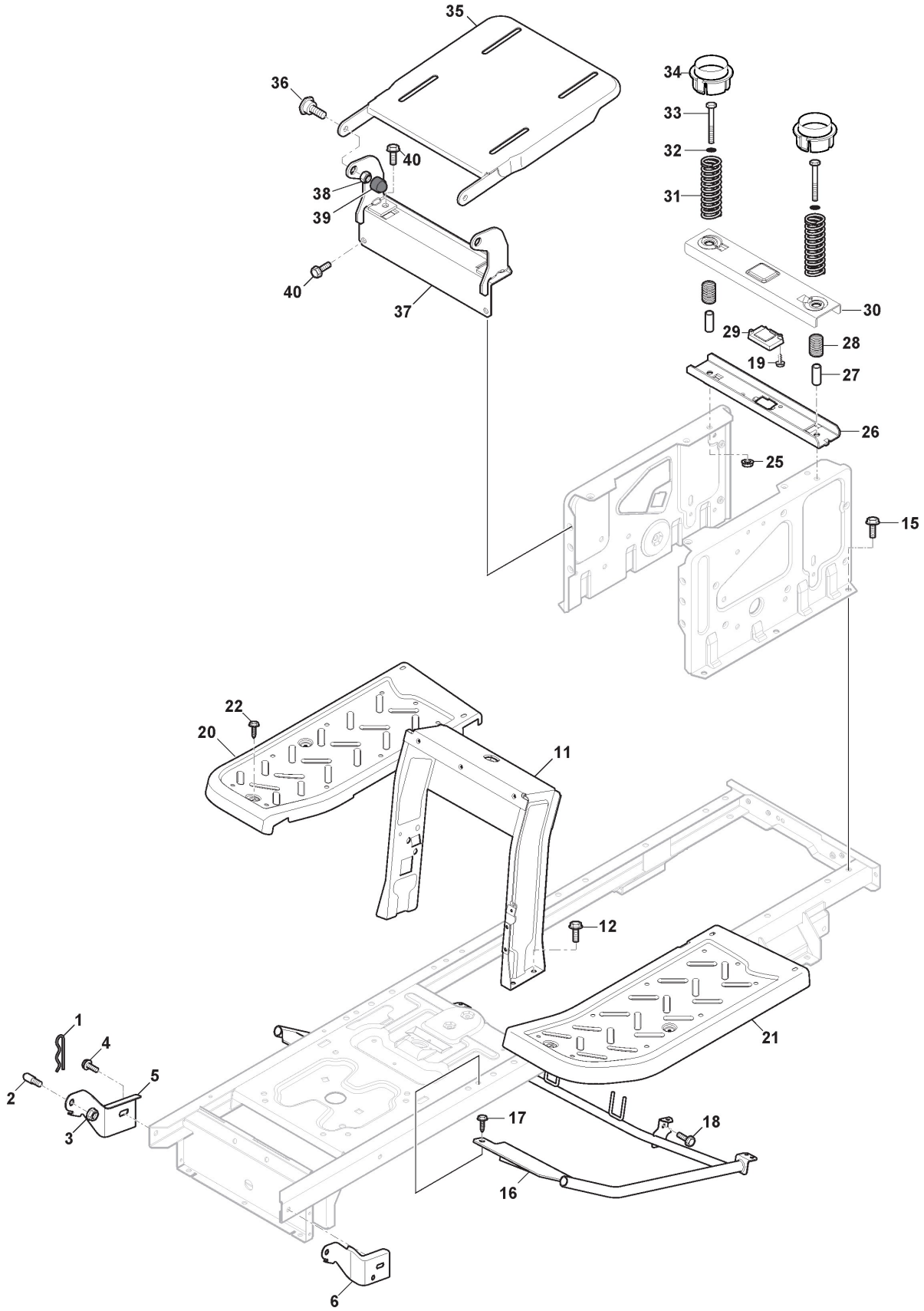

Copyright ST. S.P.A.

Frame

Ref.nr.	Qty	Item number	Description	Notes	From	Up to
1	1	124487998/0	Cotter Pin			
2	2	125510169/1	Pin			
3	4	112155000/0	Nut			
4	2	112735403/0	Screw			
5	1	325547225/0	Right Plate			
6	1	325547227/0	Left Plate			
11	1	382785169/1	Steering Column Support			
12	4	125943009/0	Screw			
15	6	125943009/0	Screw			
16	1	382785197/1	Footboard Support	For Hydrostatic Models		
17	2	125943009/0	Screw			
18	2	125943009/0	Screw			
19	2	112728686/0	Screw			
20	1	325500050/0	Right Footboard			
21	1	325500051/0	Left Footboard			
22	2	112735403/0	Screw			
25	2	112293201/0	Nut			
26	1	325820109/1	Seat Support			
27	2	125160048/0	Spacer			
28	2	125430263/0	Spring			
29	1	325785379/1	Support			
30	1	325820111/1	Switch Comand Cross			
31	2	125430264/1	Spring			
32	2	112521350/0	Washer			
33	2	112691400/0	Screw			
34	2	325600148/0	Hood			
35	1	382547061/1	Plate			
36	2	122524970/3	Pin			
37	1	382820151/2	Seat Support			
38	2	112155010/0	Nut			
39	2	118203854/0	Cap			
40	4	125943009/0	Screw			

Copyright ST. S.P.A.

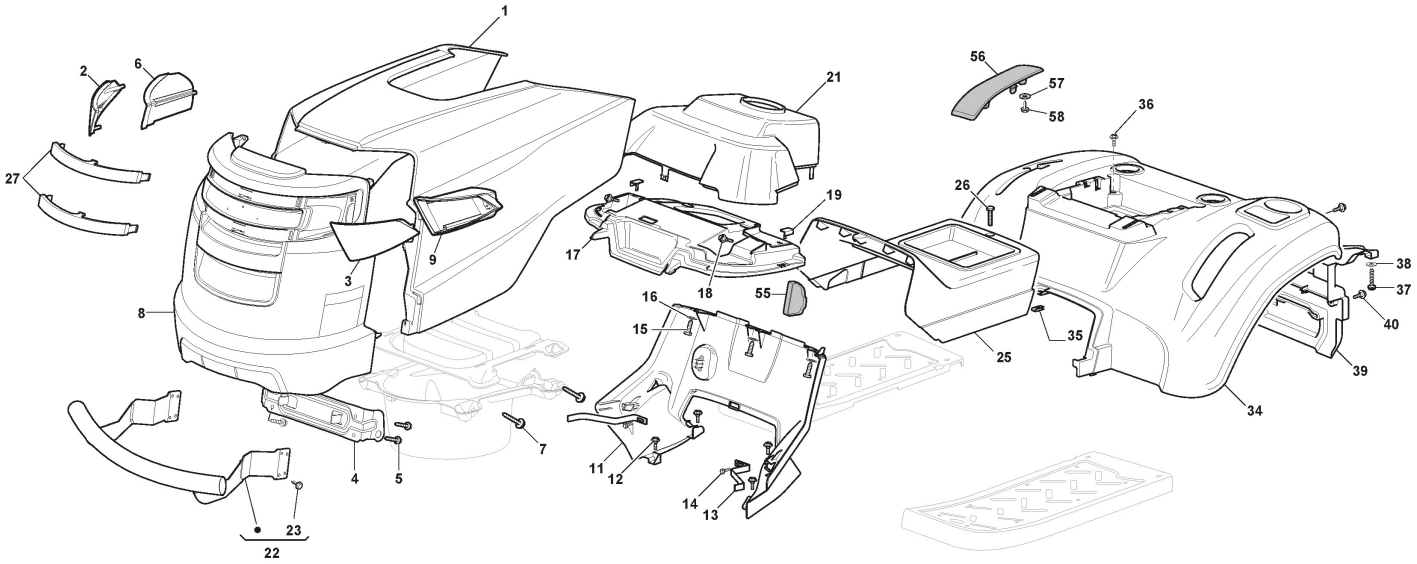

Copyright ST. S.P.A.

Ref.nr.	Qty	Item number	Description	Notes	From	Up to
1	1	325076913/0	Engine Hood Black			
2	1	325410941/0	Right Headlight Transparent			
3	1	325410942/0	Left Headlight Transparent			
4	1	325785365/0	Engine Hood Support			
5	4	112735403/0	Screw			
6	1	325785599/0	Right Lamp Support			
7	4	112728714/0	Screw			
8	1	325077016/1	Hood Front, Black			
9	1	325785600/0	Left Lamp Support			
11	1	325785298/0	Dashboard Support			
12	4	125943010/0	Screw			
13	2	325270325/0	Guide			
14	2	112735599/0	Screw			
15	3	112735406/0	Screw			
16	3	112523040/0	Washer			
17	1	325120259/2	Dashboard			
18	2	125943010/0	Screw			
19	2	325260003/0	Grommet			
21	1	325120203/0	Dashboard Cover			
22	1	382869037/0	Muffler Protection			
23	1	112735599/0	Screw			
25	1	325110397/1	Black Central Cover			
26	1	125943010/0	Screw			
27	2	325076955/0	Frontal Moulding			
34	1	325110400/0	Black Wheels Cover			
35	1	112437506/0	Plate			
36	2	125943010/0	Screw			
37	2	112735406/0	Screw			
38	2	112523040/0	Washer			
39	1	325547208/3	Rear Plate			
40	2	125943010/0	Screw			
55	1	325207191/0	Plate	Not needed for Hydro Models		
56	1	325207190/1	Cover	Not needed for Gear Models		
57	4	112155000/0	Nut			
58	4	112735599/0	Screw			

Copyright ST. S.P.A.

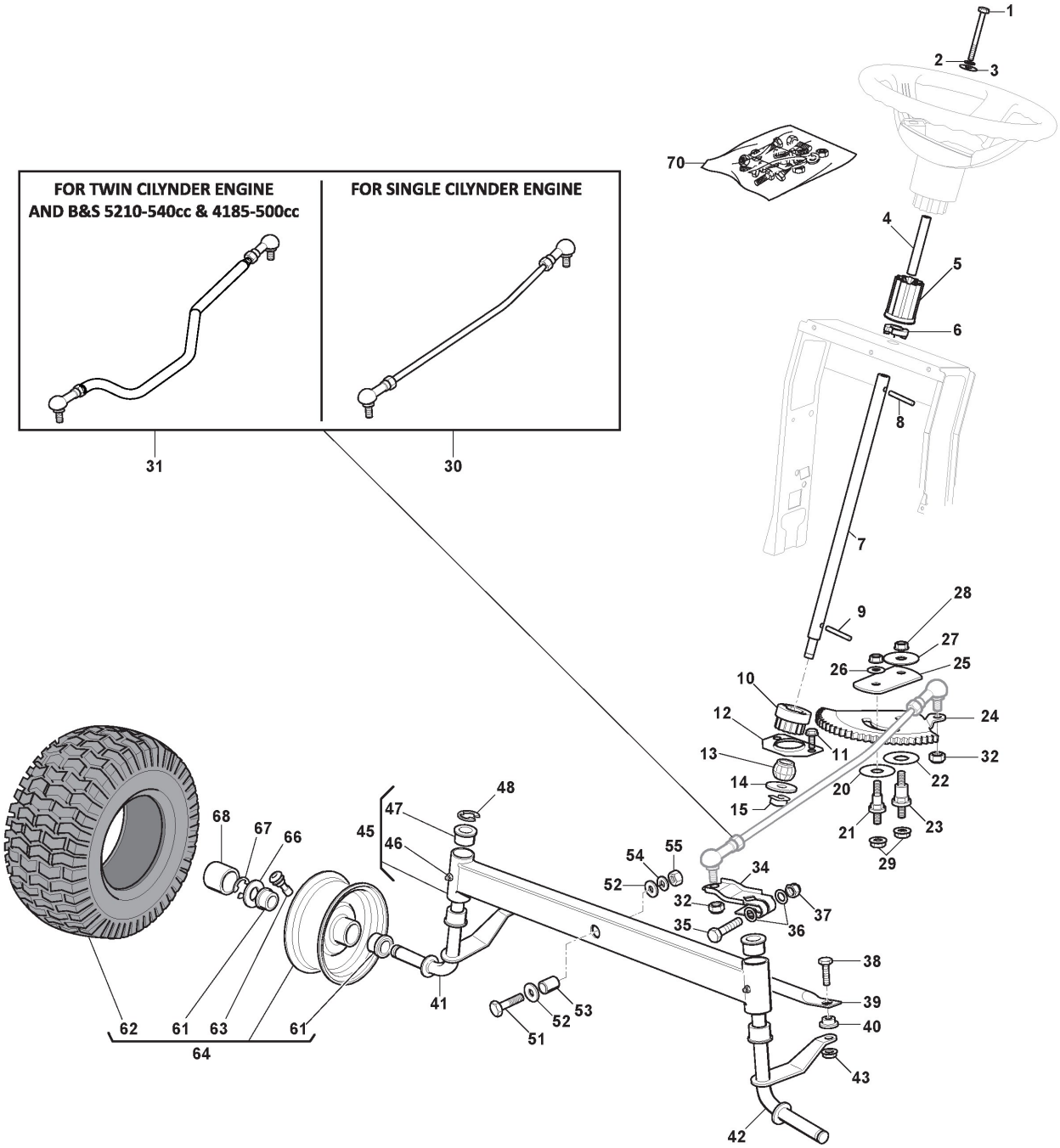

Copyright ST. S.P.A.

Steering

Ref.nr.	Qty	Item number	Description	Notes	From	Up to
1	1	112692050/0	Screw			
2	1	112540260/0	Washer			
3	1	112523070/0	Washer			
4	1	125160047/0	Spacer			
5	1	325785318/0	Support			
6	1	325038008/0	Bushing			
7	1	125520007/0	Steering Column			
8	1	112620300/0	Spring			
9	1	112622650/0	Dowel pin			
10	1	125570003/0	Pinion			
11	2	127943051/0	Screw			
12	1	325785213/1	Support			
13	1	325743000/0	Joint			
14	1	112521370/0	Washer			
15	1	112436030/0	Plate			
20	1	322672151/0	Antifriction Washer			
21	1	125510104/0	Pin			To S/N 19LA3RON 007423
21	1	125510173/0	Pin		From S/N	
22	1	125670023/0	Washer			
23	1	125510109/0	Pin			To S/N
23	1	125510165/0	Pin		From S/N 19FA3RON 000287	
24	1	325735519/0	Steering Sector			
25	1	325547233/0	Plate			
26	1	112369500/0	Elastic Washer			
27	1	122160400/0	Elastic Disc			
28	2	112155010/0	Nut			
29	2	112155010/0	Nut			
30	1	382000566/2	Steering Rod	For Single Cylinder Engine		
32	2	112156602/0	Nut			
34	1	325318243/0	Lever			To
34	1	382318323/0	Steering Control Lever		From 17-June-2019	
35	1	112692390/0	Screw			To
35	1	112692395/2	Screw		From 17-June-2019	
36	2	112521360/0	Washer	no more needed		To
37	1	112155020/0	Nut		From 17-June-2019	
37	1	112156602/0	Nut			To
38	2	125510103/0	Pin			
39	1	325840029/0	Tie Rod			
40	2	325038007/0	Bushing			
41	1	382230373/0	Right Stub Axle	15"		To S/N
41	1	382230373/1	Right Stub Axle	15"	From S/N 19FA3RON 000055	
42	1	382230375/0	Left Stub Axle	15"		To S/N
42	1	382230375/1	Left Stub Axle	15"	From S/N 19FA3RON 000103	
43	2	112155000/0	Nut			
45	1	382034030/0	Equalizer With Bush And Lubricator			

Copyright ST. S.P.A.

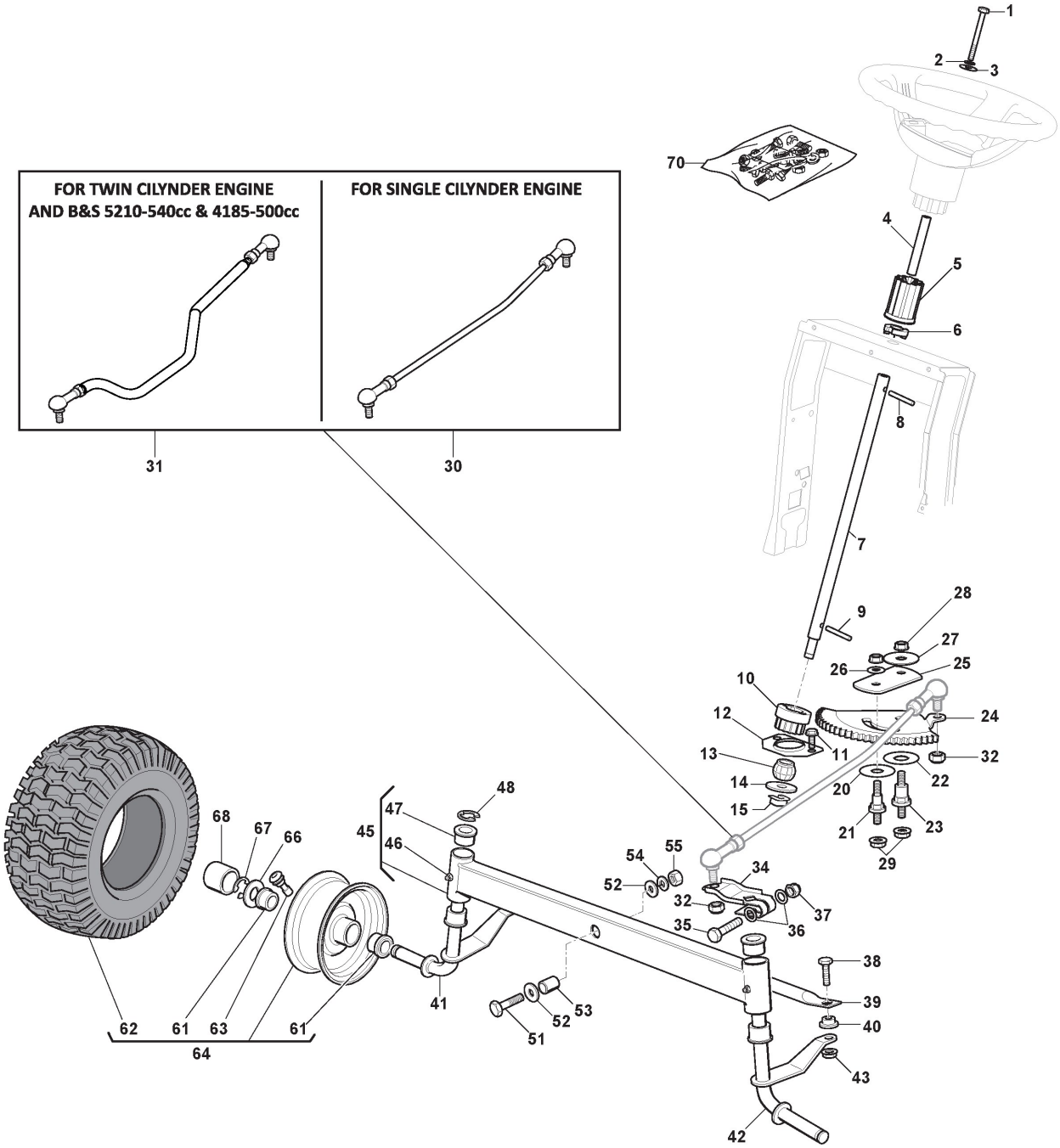

Copyright ST. S.P.A.

Ref.nr.	Qty	Item number	Description	Notes	From	Up to
46	2	112379511/0	Grease Dispenser			
47	4	125034002/1	Bushing			
48	1	112001010/0	Benzing Ring			
51	1	112692695/0	Screw			
52	2	112523100/0	Washer			
53	1	125160016/1	Spacer			
54	1	112587100/0	Grower			
55	1	112295300/0	Nut			
61	4	125122200/2	Bearing			
62	2	125590019/0	Tyre 15x6.00-6 P512 WANDA	15"		
63	2	125950000/0	Valve			
64	2	382680051/0	Wheel Assy	15" - P512		
66	2	125670005/2	Washer			
67	2	112001010/0	Benzing Ring			
68	2	322110233/0	Hub Cover	Standard Cover		
70	1	382180142/0	Outfit, Screws	Pos 1-4 incl.		

Copyright ST. S.P.A.

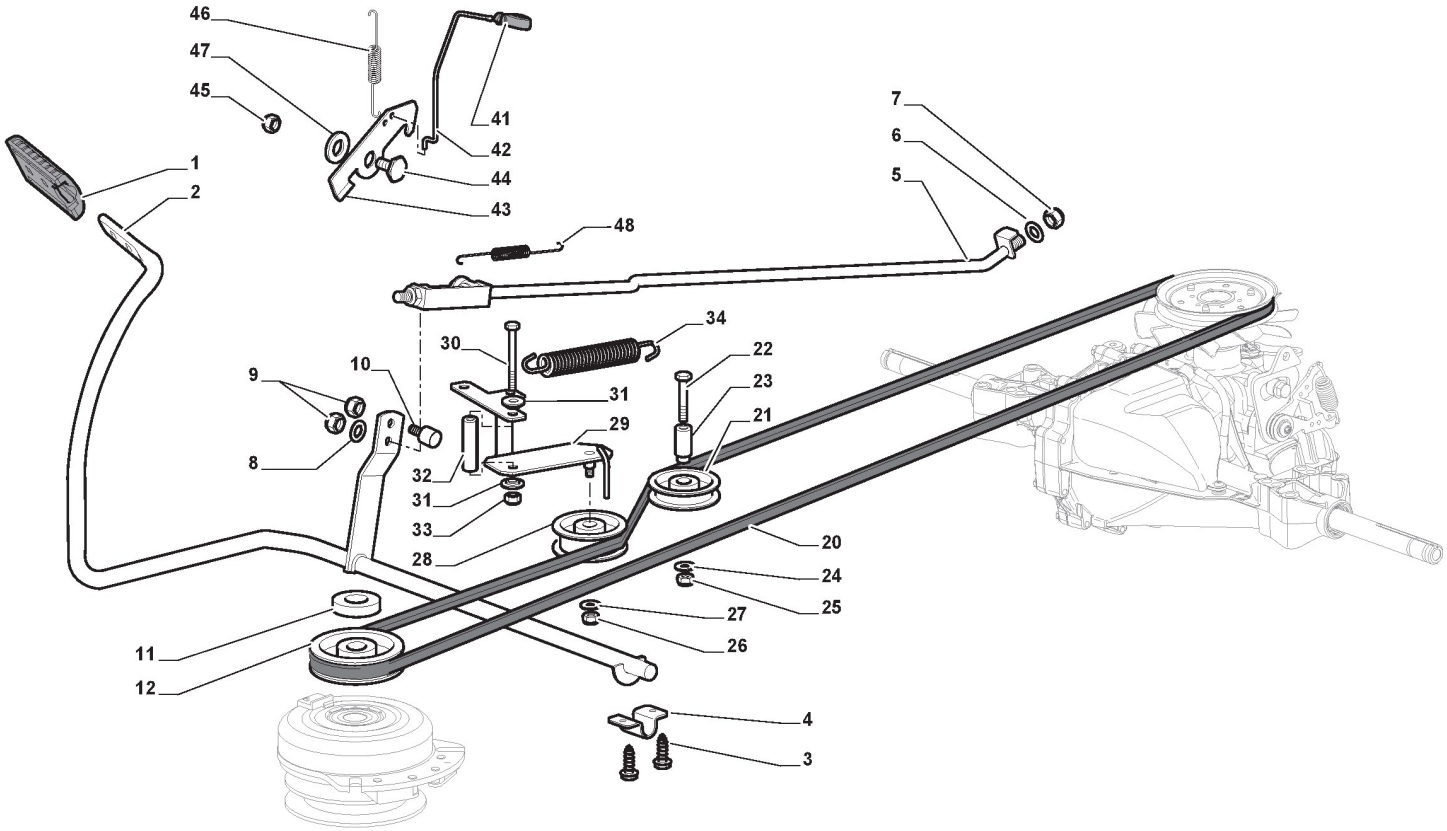

Copyright ST. S.P.A.

Brake And Gearbox Controls

Ref.nr.	Qty	Item number	Description	Notes	From	Up to
1	1	325110409/0	Clamp Cover			
2	1	382000641/0	Pedal			To S/N
2	1	382000641/1	Pedal		From S/N 19FA3RON 000275	
3	4	112735599/0	Screw			
4	2	325547231/0	Plate			To S/N 20JA3RON 000566
4	2	325547231/1	Plate		From S/N	
5	1	382000576/0	Rod			To 07-November-2021
5	1	382000576/1	Brake Rod Assy		From	
6	1	112521360/0	Washer			
7	1	112156602/0	Nut			
8	1	325670011/0	Antifriction Washer			
9	2	112155000/0	Nut			
10	1	125510116/0	Pin			To S/N 19DA3RON 003314
10	1	125510166/0	Pin		From S/N	
11	1	125160021/0	Spacer			
12	1	125601577/0	Pulley			
20	1	135062003/0	Belt			To 31-August-2015
20	1	135062003/1	Belt		From	
21	1	125601555/0	Pulley	Bearing hole ø16		To 31-August-2013
21	1	325601599/0	Pulley	Bearing hole ø15	From	
22	1	112691400/0	Screw			
23	1	125160051/0	Spacer			To S/N
23	1	125160083/0	Spacer		S/N 00088194	To S/N 19LA3RON 001058
23	1	125160107/0	Spacer		From S/N	
24	1	112523060/0	Washer			
25	1	112155000/0	Nut			
26	1	112155000/0	Nut			
27	1	112523060/0	Washer			
28	1	125601554/0	Pulley			
29	1	382318245/0	Lever			
30	1	112691600/0	Screw			
31	2	125038002/1	Bushing			To
31	2	125038021/0	Bushing		From 01-September-2016	
32	1	125160027/0	Spacer			
33	1	112155000/0	Nut			
34	1	125430262/0	Spring			
41	1	125394509/1	Knob		From 01-September-2013	
41	1	325394534/0	Knob			To
42	1	125033083/0	Rod			To 31-August-2013
42	1	125033113/0	Rod		From	
43	1	325253011/0	Hook			To 31-August-2013
43	1	325253011/1	Hook		From	
44	1	122524970/2	Fulcrum Pin			To 31-August-2014
44	1	122524970/3	Pin		From	
45	1	112155000/0	Nut			

Copyright ST. S.P.A.

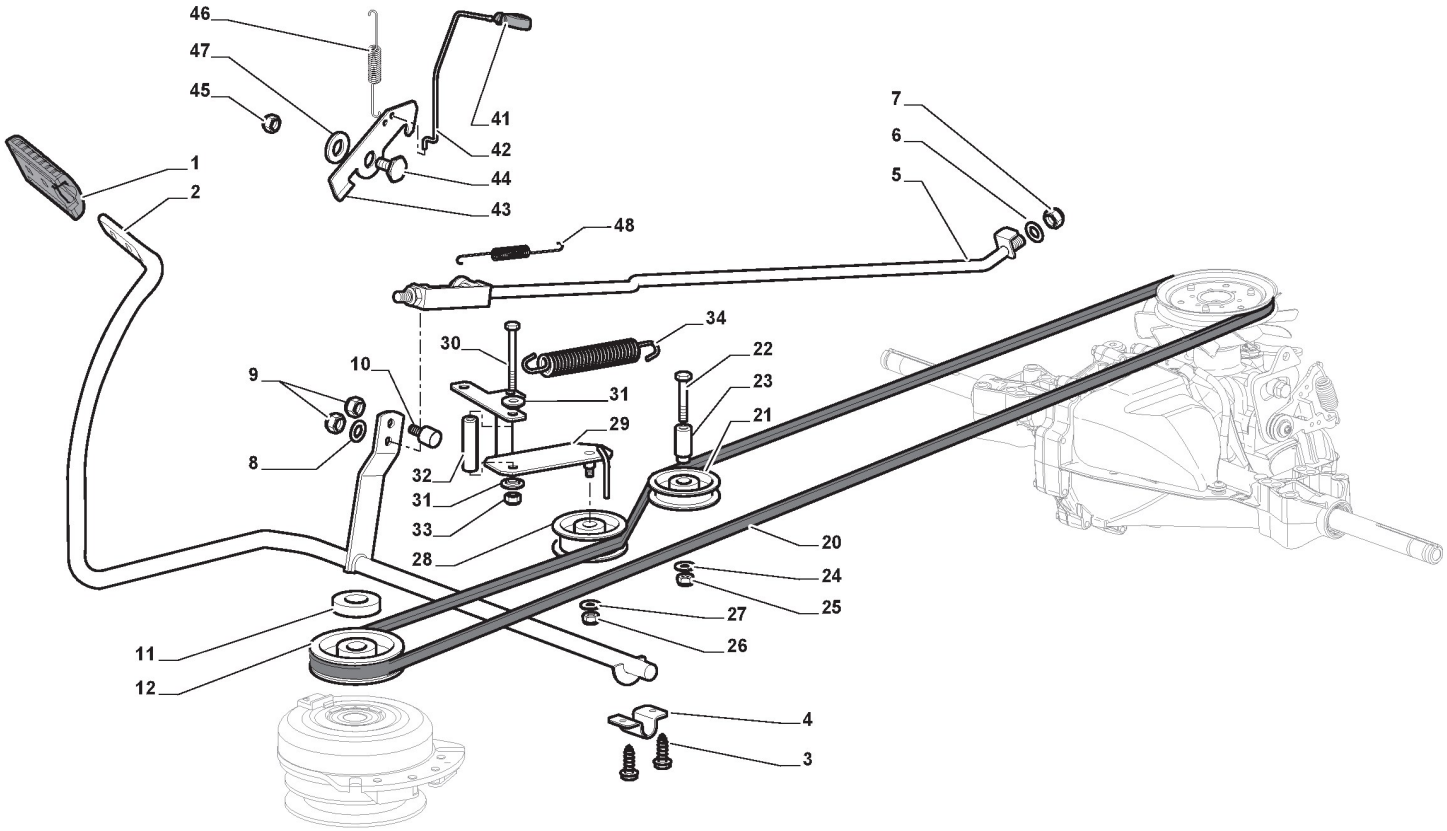

Copyright ST. S.P.A.

Ref.nr.	Qty	Item number	Description	Notes	From	Up to
46	1	125430213/0	Spring			
47	1	112523060/0	Washer			
48	1	125430269/1	Spring			

Copyright ST. S.P.A.

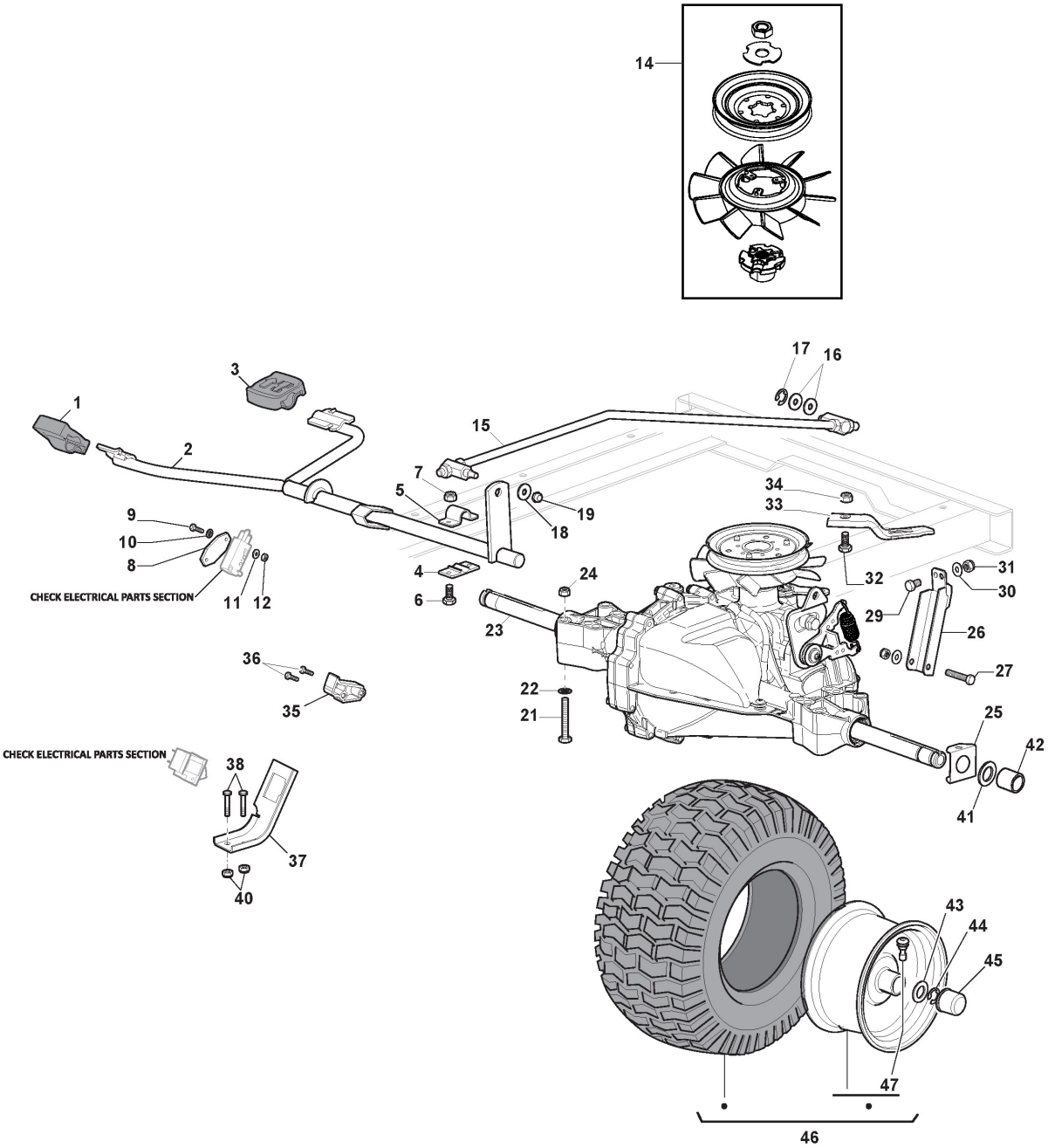

Copyright ST. S.P.A.

Transmission

Ref.nr.	Qty	Item number	Description	Notes	From	Up to
1	1	325110274/0	Clamp Cover Front			
2	1	382000574/2	Drive Pedal			
3	1	325110331/0	Clamp Cover Rear			
4	2	325785350/0	Support			
5	2	325547231/0	Plate			To S/N 20JA3RON 000566
5	2	325547231/1	Plate		From S/N	
6	4	112735599/0	Screw			
7	4	112154510/0	Nut			
8	1	327546019/0	Neutral Switch Fixing Plate			
9	2	112735602/0	Screw			
10	2	112540020/0	Washer			
11	2	112581100/0	Grower			
12	2	112290791/0	Nut			
14	1	118802723/0	Fan Kit			
15	1	382000573/1	Rod			
16	2	325670011/0	Antifriction Washer			
17	1	112000940/0	Benzing Ring			
18	1	112523040/0	Washer			
19	1	112154510/0	Nut			
21	4	112691600/0	Screw			
22	4	112521350/0	Washer			
23	1	118400919/2	Transmission (Hydro-Gear T2-Adbf-2X3C-17X1)			
24	4	112155000/0	Nut			
25	2	325670026/0	Washer			
26	1	325785349/1	Support			
27	1	112691700/0	Screw			
29	1	112792611/0	Screw			
30	2	112523060/0	Washer			
31	2	112155000/0	Nut			
32	1	112791213/1	Screw			
33	1	325318251/0	Lever			
34	1	112154510/0	Nut			
35	1	325060034/1	Cam			
36	2	112735403/0	Screw			
37	1	325774573/0	Clamp			
38	2	112791400/0	Screw			
40	2	112154510/0	Nut			
41	2	125670005/2	Washer			
42	2	125160058/0	Spacer			To 31-December-2020
42	2	125160058/1	Spacer		From	
43	6	125670005/2	Washer			
44	2	112001010/0	Benzing Ring			
45	2	322110233/0	Hub Cover	Standard Cover		
46	2	382680042/0	Wheel Assy			To S/N
46	2	382680092/0	Wheel Assy 18"		From S/N	

Copyright ST. S.P.A.

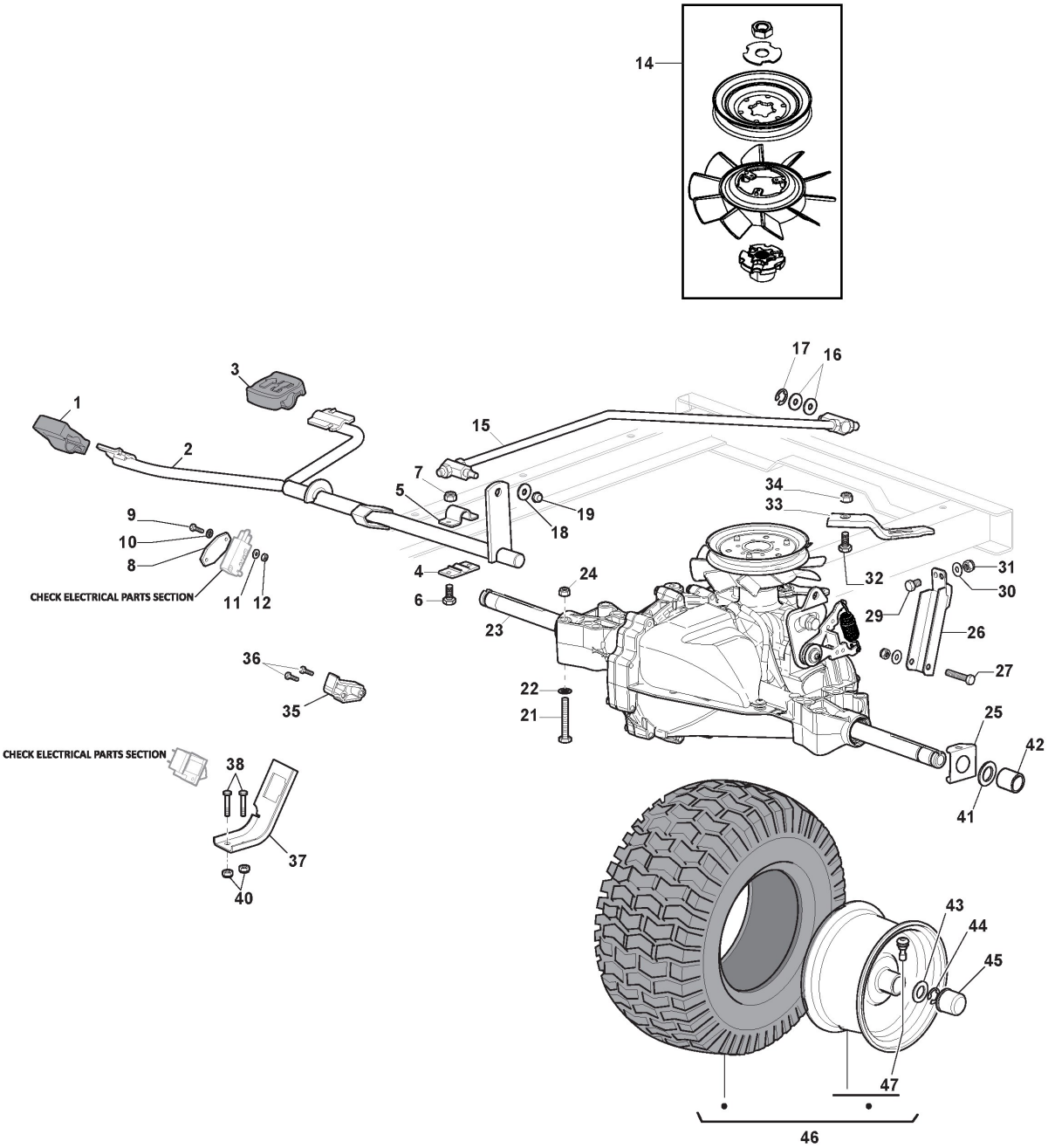

Copyright ST. S.P.A.

Ref.nr.	Qty	Item number	Description	Notes	From	Up to
47	2	125950000/0	Valve			

Copyright ST. S.P.A.

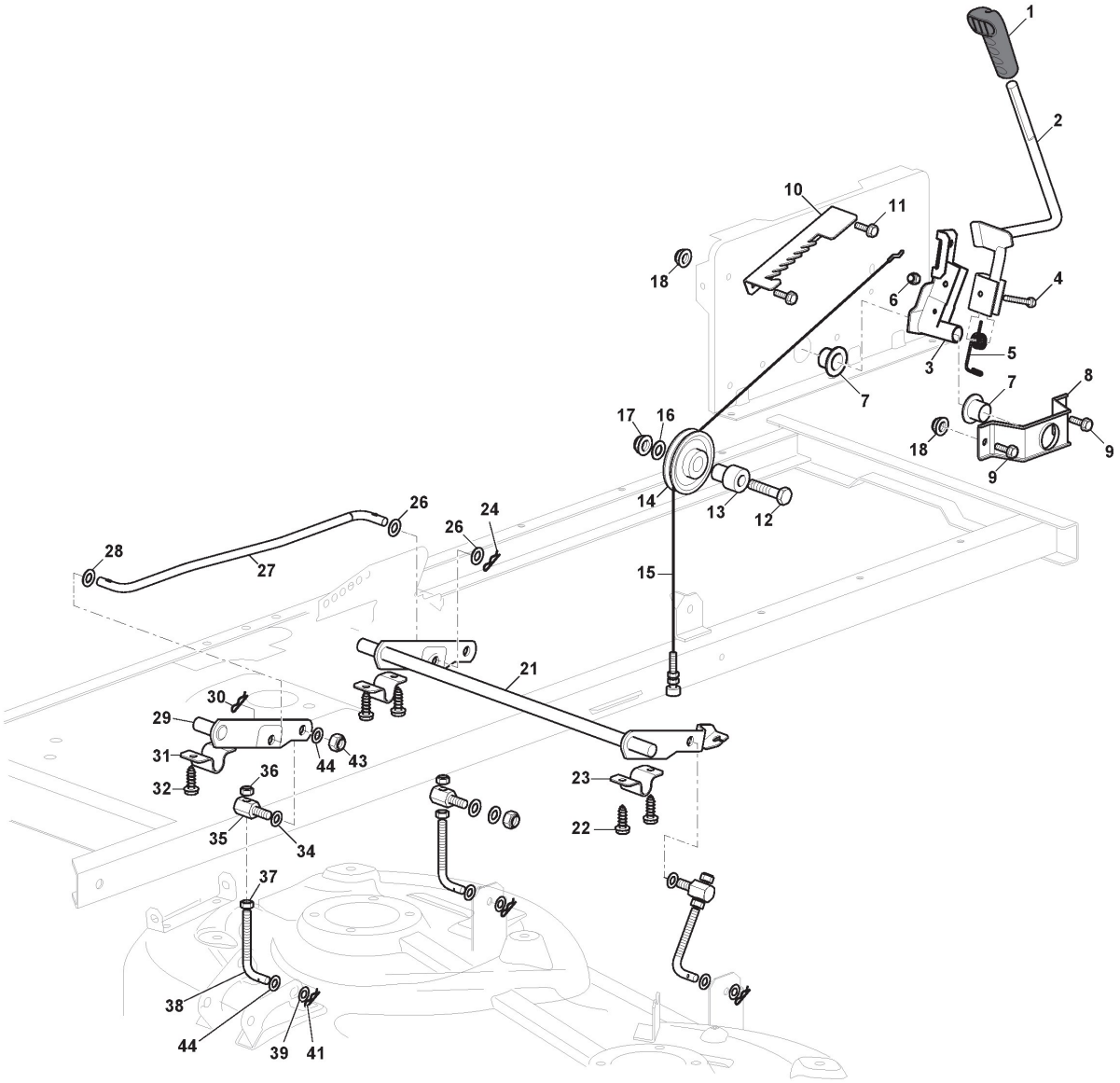

Copyright ST. S.P.A.

Cutting Plate Lifting

Ref.nr.	Qty	Item number	Description	Notes	From	Up to
1	1	325394533/0	Knob			
2	1	382318229/0	Lever			
3	1	382318231/1	Lifting Axle Assy			
4	1	112674700/0	Screw			
5	1	125430261/0	Spring			
6	1	112154510/0	Nut			
7	2	325038006/0	Bushing			
8	1	325785297/0	Support			
9	2	112792611/0	Screw			
10	1	325735515/0	Steering Sector			
11	2	112792611/0	Screw			
12	1	112793701/0	Screw			
13	1	125040636/1	Bushing			
14	1	125601579/0	Pulley			
15	1	382004620/0	Wire			
16	1	112523060/0	Washer			
17	1	112293201/0	Nut			
18	4	112155000/0	Nut			
21	1	382318295/1	Lifting Axle			
22	4	112735599/0	Screw			
23	2	325547231/1	Plate			
24	1	124487997/0	Cotter Pin			
26	2	325670010/0	Antifriction Washer			
27	1	125033109/0	Connecting Rod			
28	1	325670010/0	Antifriction Washer			
29	1	382318293/1	Axle			
30	1	124487997/0	Cotter Pin			
31	1	325547231/1	Plate			
32	2	112735599/0	Screw			
34	3	325670008/1	Washer			
35	3	125510170/0	Pin			
36	3	112156602/0	Nut			
37	3	112295200/0	Nut			
38	1	125840012/1	Tie Rod			
39	3	325670008/1	Washer			
41	3	124487998/0	Cotter Pin			
43	3	112156602/0	Nut			
44	6	112521360/0	Washer			

Copyright ST. S.P.A.

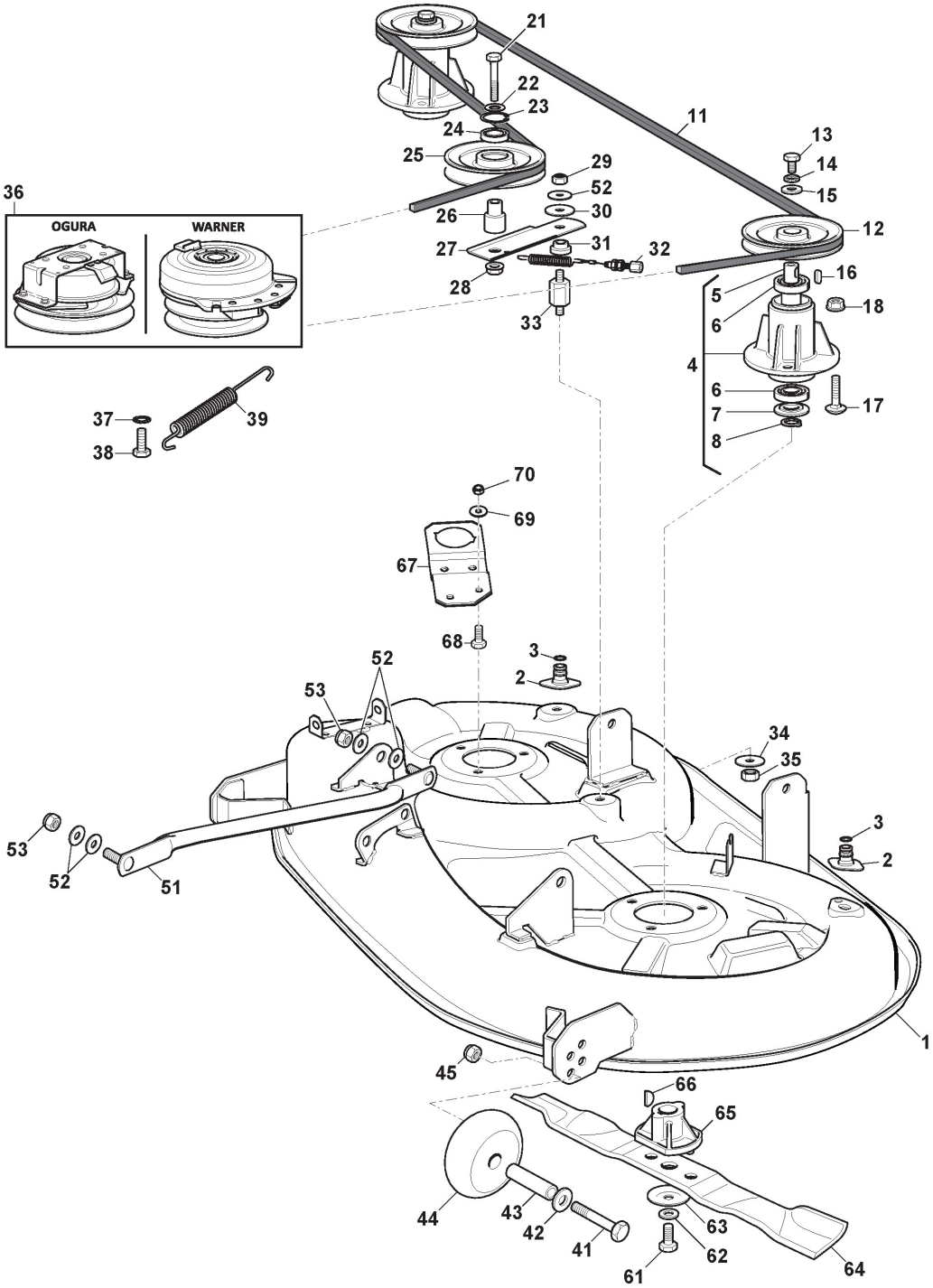

Copyright ST. S.P.A.

Cutting Plate

Ref.nr.	Qty	Item number	Description	Notes	From	Up to
1	1	382564209/4	Cutting Plate Black	Black		
2	2	325033086/0	Water Hose Connection			
3	2	119035000/0	Or Ring			
4	2	382207204/1	Flange Assy			
5	2	125020804/0	Blade Shaft			
6	4	119216047/0	Bearing			
7	2	325160501/1	Dust Cover Disc			
8	2	112609260/0	Seeger			
11	1	135061504/0	Belt			
12	2	125601571/0	Pulley			
13	2	112793102/0	Screw			
14	2	112540260/0	Washer			
15	2	125670007/0	Washer			
16	2	112139480/0	Feather			
17	6	112818700/0	Screw			
18	6	112154210/0	Nut			
21	1	112691900/0	Screw			
22	1	112524010/0	Washer			
23	1	112610800/0	Seeger			
24	1	119216048/0	Bearing			
25	1	125601606/0	Pulley			
26	1	125160056/0	Spacer			
27	1	325318232/0	Lever			
28	1	112293201/0	Nut			
29	1	112155020/0	Nut			
30	1	125670022/0	Washer			
31	1	125040635/0	Bushing			
32	1	382004618/0	Wire			
33	1	125160086/0	Spacer			
34	1	112523080/0	Washer			
35	1	112156602/0	Nut			
36	1	118399063/0	Electromagnetic Clutch	Warner (alternative as spare)		
36	1	118399077/1	Electromagnetic Clutch	Ogura (original on the machine)		
37	1	112543000/0	Washer			
38	1	112737320/0	Screw			
39	1	125430277/1	Spring			
41	2	112692050/0	Screw			
42	2	112523060/0	Washer			
43	2	125510072/1	Pin			
44	2	182700001/0	Levelling Small Wheel			
45	2	112293201/0	Nut			
51	2	382000565/1	Equalizer Rod			
52	9	325670008/1	Washer			
53	4	112156602/0	Nut			
61	2	112735694/0	Screw			

Copyright ST. S.P.A.

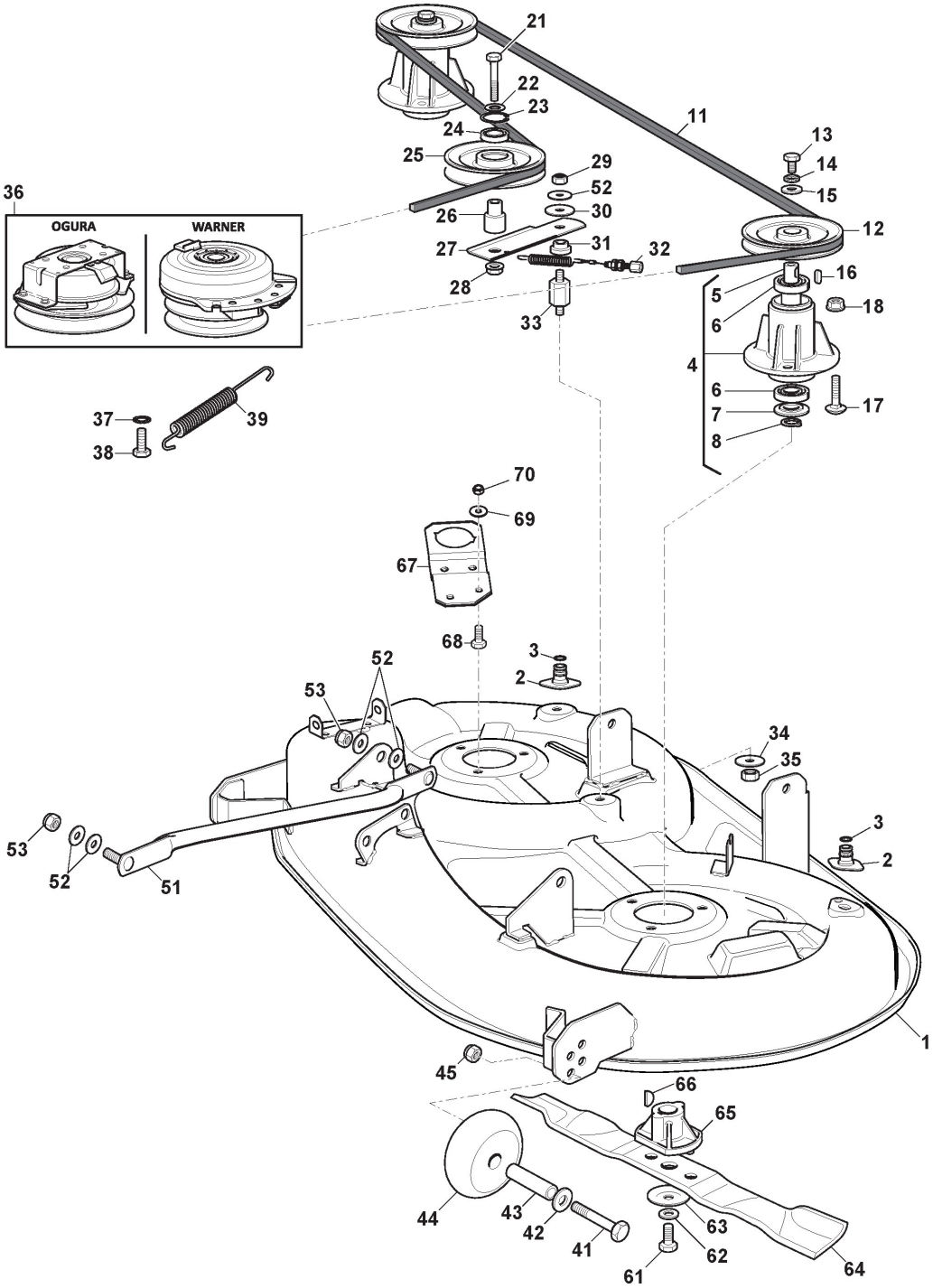

Copyright ST. S.P.A.

Cutting Plate

Ref.nr.	Qty	Item number	Description	Notes	From	Up to
62	2	112523080/0	Washer			
63	2	122160400/0	Elastic Disc			
64	1	1134-9225-01	Mulching Blades	Stiga Packed into 182004346/0 (2pcs)		
64	2	182004346/0	Left Blade, Mulching			
65	2	1134-9159-01	Blade Holder	Stiga Packed into 125463200/0		
65	2	125463200/0	Blade Holder			
66	2	112139100/0	Key			
67	2	325774665/0	Bracket			
68	2	112793102/0	Screw			
69	2	112523060/0	Washer			
70	2	112154210/0	Nut			

Copyright ST. S.P.A.

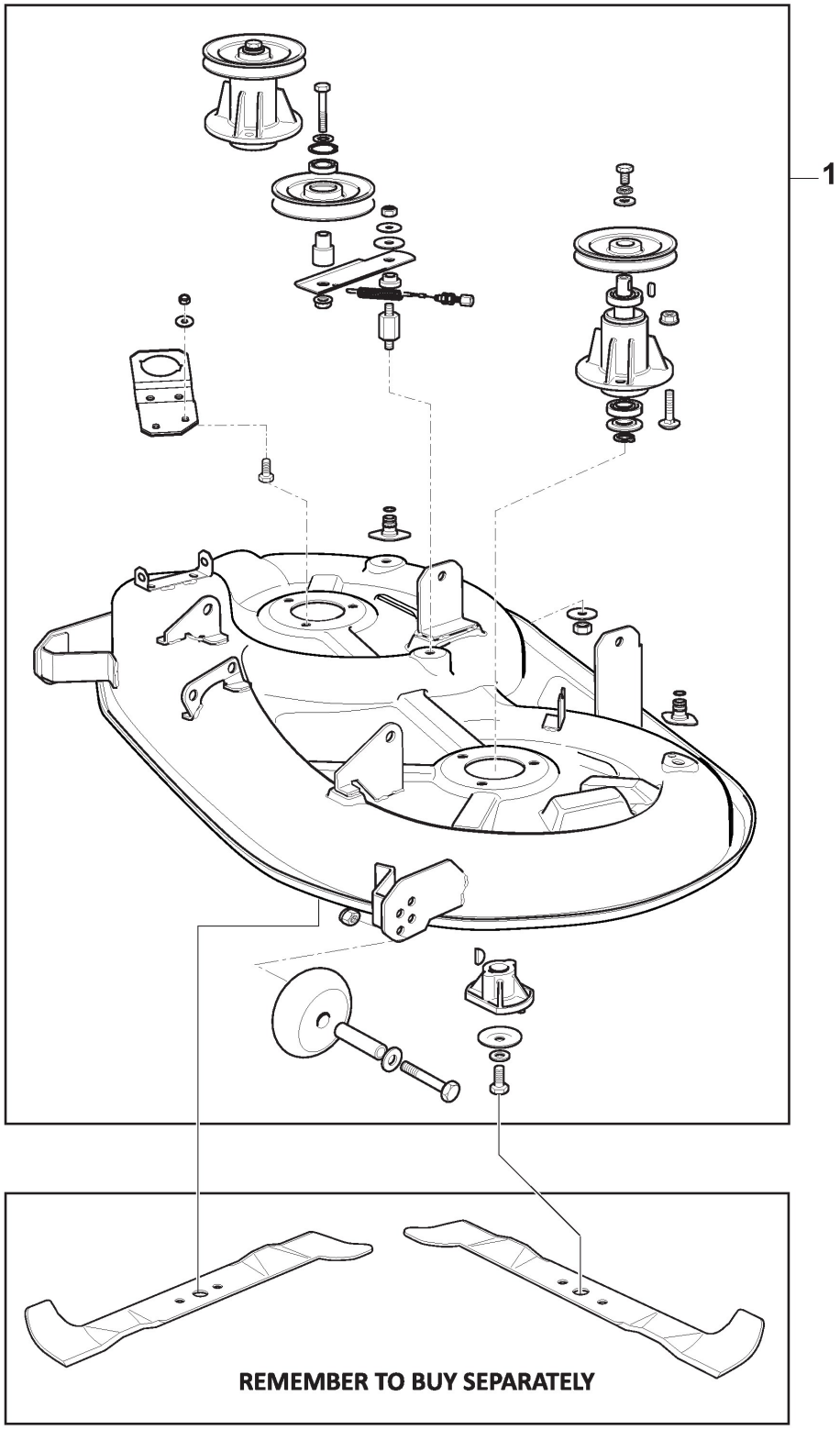

Copyright ST. S.P.A.

Cutting Deck Assy - SD98

Ref.nr.	Qty	Item number	Description	Notes	From	Up to
1	1	382565106/0	Cutting Plate Assy, Grey	Black		

Copyright ST. S.P.A.

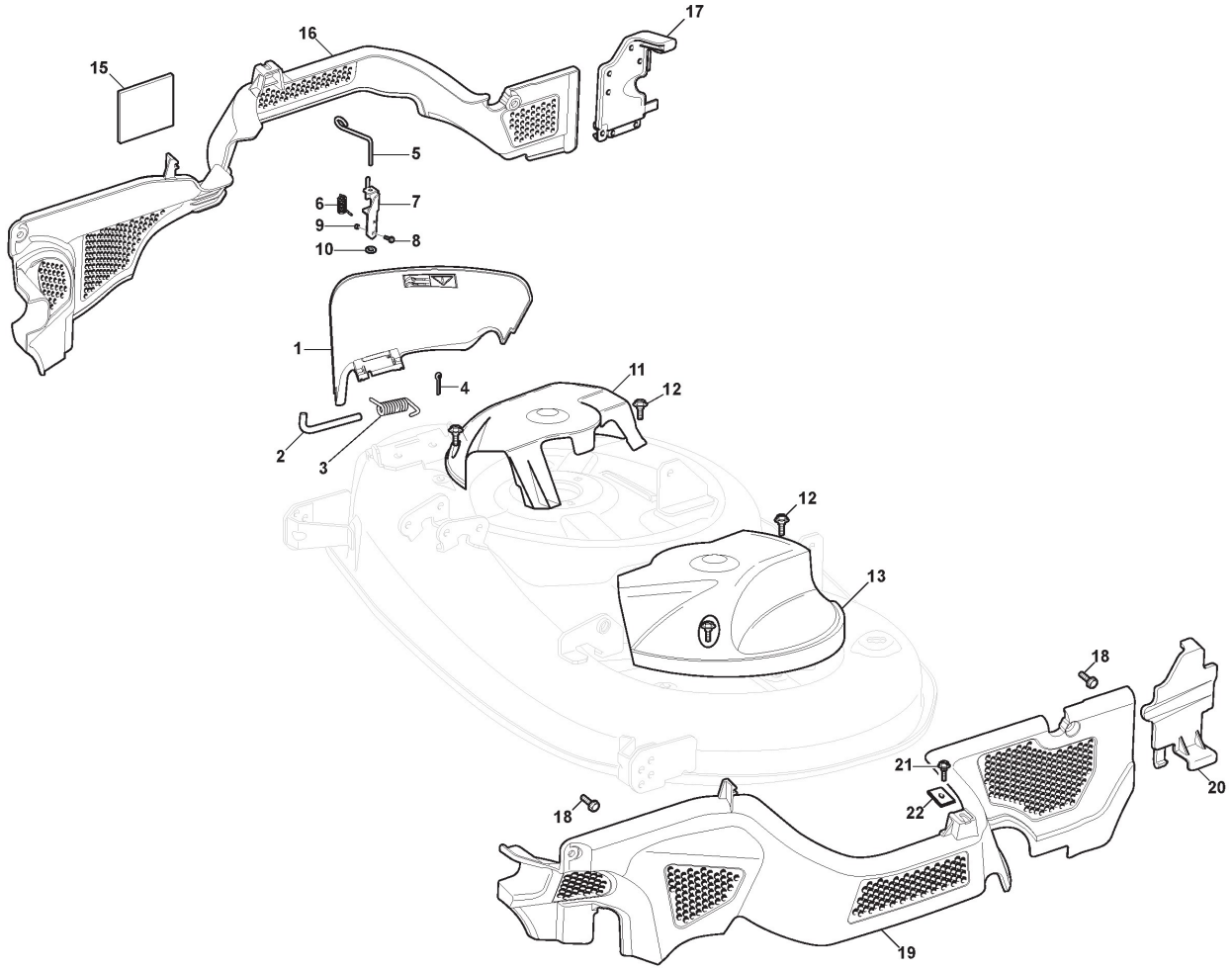

Copyright ST. S.P.A.

Belt Protections

Ref.nr.	Qty	Item number	Description	Notes	From	Up to
1	1	325600077/3	Ejection Guard			
2	1	125510073/0	Fulcrum Pin			
3	1	125430242/1	Spring			
4	1	112141418/0	Cotter Pin			
5	1	125318355/0	Fulcrum Pin			
6	1	125430288/0	Spring			
7	1	325774719/0	Fulcrum Clamp			
8	2	112815200/0	Screw			
9	2	112154510/0	Nut			
10	1	112604899/0	Crown Fastener			
11	1	325600078/0	Right Belt Protection Carter			
12	4	125943010/0	Screw			
13	1	325600079/0	Left Belt Protection			
15	1	325600084/0	Guard	only 98cm		
16	1	325060154/0	Case			
17	1	325600082/0	Guard			
18	4	125943011/0	Screw			
19	1	325060155/0	Case			
20	1	325600083/0	Guard			
21	2	125943010/0	Screw			
22	2	112437506/0	Plate			

Copyright ST. S.P.A.

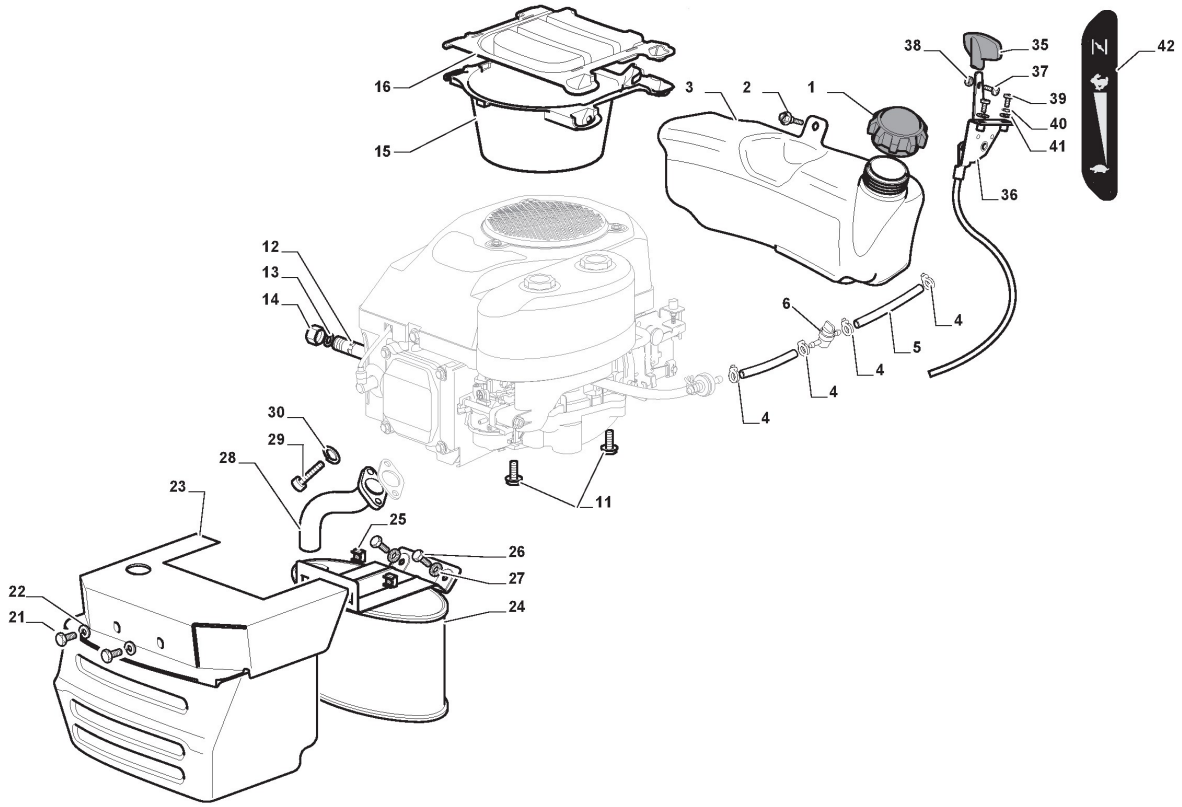

Copyright ST. S.P.A.

Engine - ST.

Ref.nr.	Qty	Item number	Description	Notes	From	Up to
1	1	125795001/1	Cap			
2	4	125943006/0	Screw			
3	1	325735126/0	Fuel Tank			To 31-August-2017
3	1	325735126/1	Tank		From	
4	4	118375051/1	Fair Led			
5	1	325869057/0	Connecting Tube			
6	1	118562996/0	Shut out valve			To 21-October-2021
6	1	118566119/0	Shut out valve		From	
11	4	112735108/1	Screw			
12	1	127598060/0	Oil Discharge Extension			
13	1	118401001/1	Oil Seal			
14	1	118737849/0	Plug			
15	1	325108044/0	Conveyor	if foreseen in assortment		To 31-August-2010
15	1	325108044/1	Conveyor	if foreseen in assortment	From	
16	1	325263302/1	Air Intake Grill	if foreseen in assortment		To 30-June-2021
16	1	325263318/0	Air Intake Grill	if foreseen in assortment	From	
21	2	112792611/0	Screw			
22	2	112540260/0	Washer			
23	1	382598045/0	Muffler Protection			To 25-May-2019
23	1	382598045/1	Muffler Protection		From	
24	1	182750010/0	Muffler			
25	2	112360425/0	Nut			
26	2	112792611/0	Screw			
27	2	112540260/0	Washer			
28	1	118738231/1	Exhaust Pipe			
29	2	112737450/0	Screw			
30	2	112540260/0	Washer			
35	1	325394531/0	Knob			
36	1	182000215/0	Accelerator			
37	1	112726389/0	Screw			
38	1	112290800/0	Nut			
39	2	112726389/0	Screw			
40	2	112540020/0	Washer			
41	2	112521310/0	Washer			
42	1	114363697/0	Label			

Copyright ST. S.P.A.

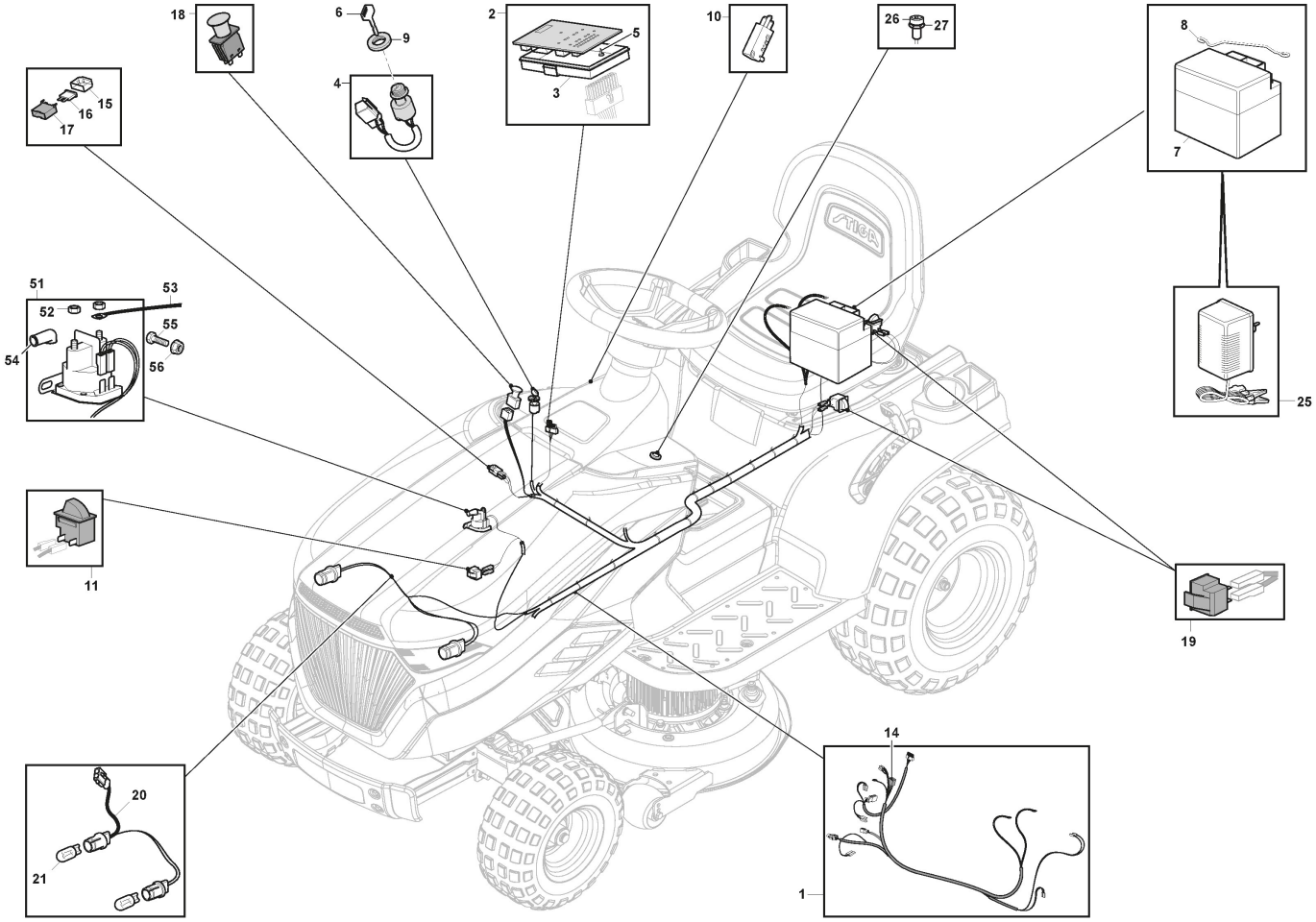

Copyright ST. S.P.A.

Electrical Parts

Ref.nr.	Qty	Item number	Description	Notes	From	Up to
1	1	182040196/1	Cables Ass.Y			
2	1	382722443/1	Electronic Card	LS marked		
3	1	325600090/1	Card Protection			
4	1	118450075/1	Starting Switch			
5	1	112727810/0	Screw			
6	1	118210023/0	Starting Key			
7	1	118120007/0	Battery			
8	1	125430265/1	Spring			
9	1	118400863/0	Screwed Ring			
10	1	119410609/1LC	Micro Switch			
11	2	119410623/0	Microswitch			
14	1	133567000/0	Relay	Only for Honda Engines		
15	2	133215000/0	Cover			
16	1	133340036/0	Fuse 25 A	25A		
16	1	133340040/0	Fuse 10 A	10A		
17	2	133500007/0	Fuse Carrier			
18	1	118450073/0	Clutch Switch	Yellow		
18	1	118450074/0	Clutch Switch	Red		
19	2	119410622/1	Microswitch			
20	1	182040186/0	Cable	For Lamp Version		
21	2	118459100/0	Lamp For Lights	Only for Models with Lamp		
25	1	182180090/0	Battery Charger 12V 1A - CE Plugg	CE Plug		
25	1	182180091/0	Battery Charger 12V 1A - UK Plugg	BS Plug		
26	1	325605003/0	Push Button Reverse Gear			
27	1	325256250/0	Screwed Ring			
51	1	118736112/0	Solenoid			
52	2	112361005/0	Nut			
53	1	125065002/0	Cable			
54	1	118564864/1	Protection			
55	1	112790781/0	Screw	Not for Honda Engines		
56	2	112154510/0	Nut	Not for Honda Engines		

Copyright ST. S.P.A.

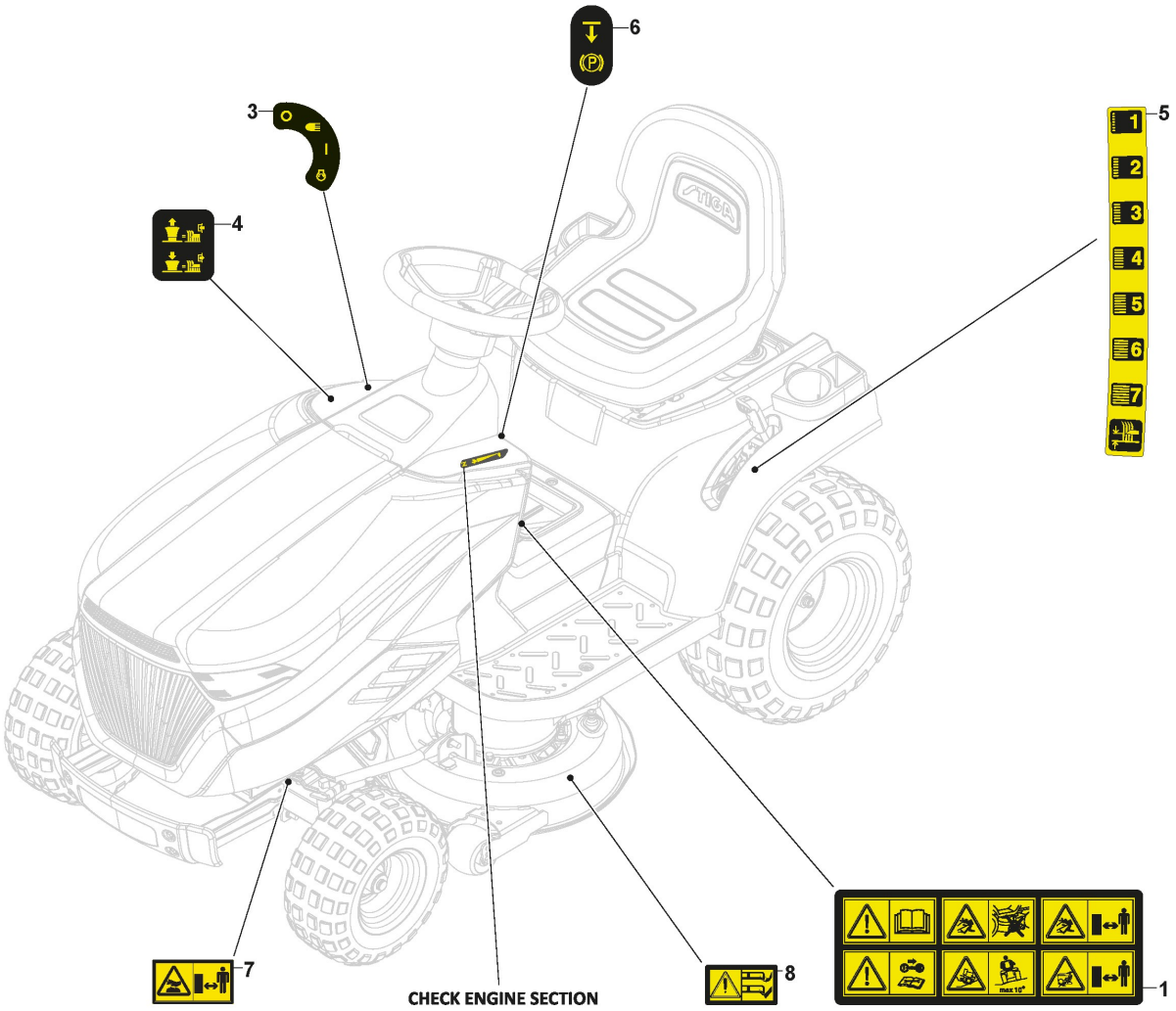

Copyright ST. S.P.A.

Labels

Ref.nr.	Qty	Item number	Description	Notes	From	Up to
1	1	114362365/1	Label			
3	1	114363699/0	Label	Only for Models with Lamp		
4	1	114361438/0	Label			
5	1	114363701/0	Label			To
5	1	114366142/0	Label		From 01-September-2014	
6	1	114363700/0	Label			
7	2	114364961/3	Label Hot Surface			
8	1	114356699/1	Cutting Deck Danger Label			
8	1	114367751/0	Cutting Deck Danger Label			

Copyright ST. S.P.A.

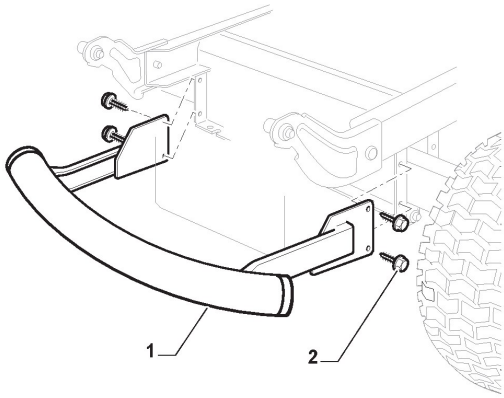

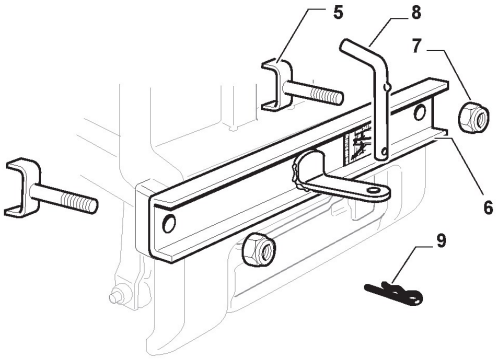

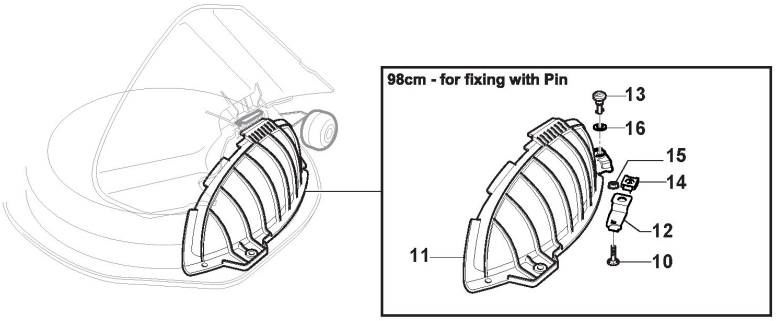

Copyright ST. S.P.A.

Optionals On Request

Ref.nr.	Qty	Item number	Description	Notes	From	Up to
1	1	382869038/0	Muffler Protection			
2	4	112735599/0	Screw			
5	2	382650211/0	Stiffening			
6	1	382033111/0	Rod			
7	2	112155000/0	Nut			
8	1	125510021/1	Hitch Pin			
9	1	124487999/0	Spring Pin			
10	2	112815206/0	Screw			
11	1	325140105/0	Deflector			
12	2	325785471/0	Pin			
13	2	125580040/0	Stake			
14	2	118737221/0	Plate			
15	2	112292102/0	Nut			
16	2	112604899/0	Crown Fastener			

Copyright ST. S.P.A.

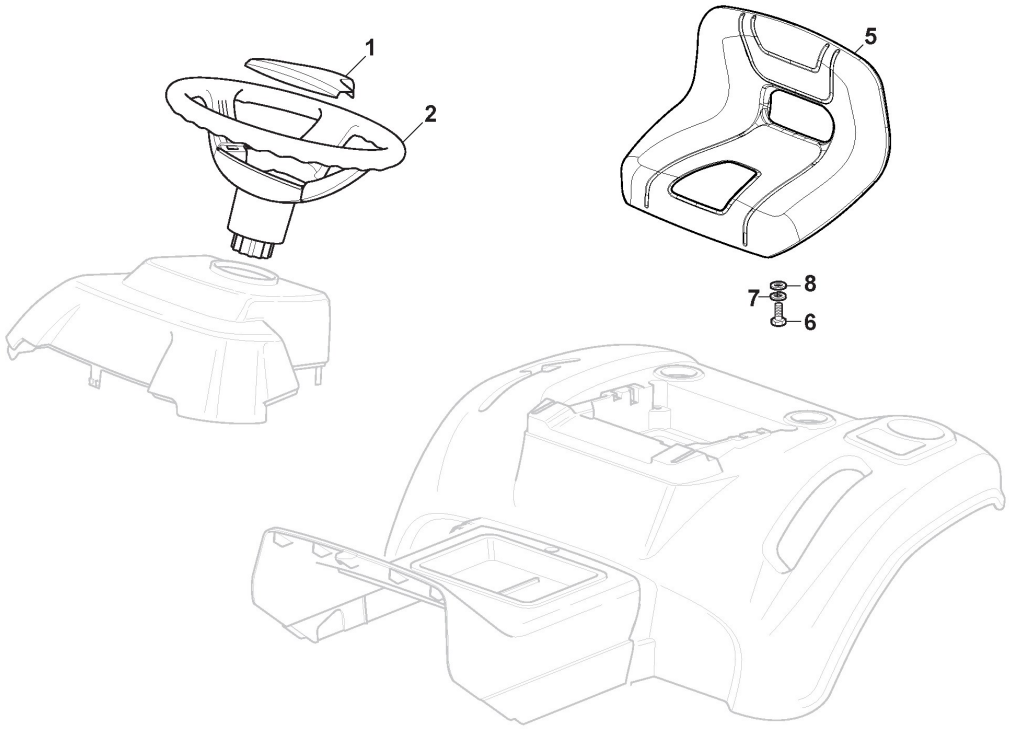

Copyright ST. S.P.A.

Seat & Steering Wheel

Ref.nr.	Qty	Item number	Description	Notes	From	Up to
1	1	325580503/0	Steering Plate Cover			
2	1	325961219/0	Steering Wheel			
5	1	125722487/0	Seat			
6	4	112792611/0	Screw			
7	4	112540260/0	Washer			
8	4	112523060/0	Washer			

Copyright ST. S.P.A.

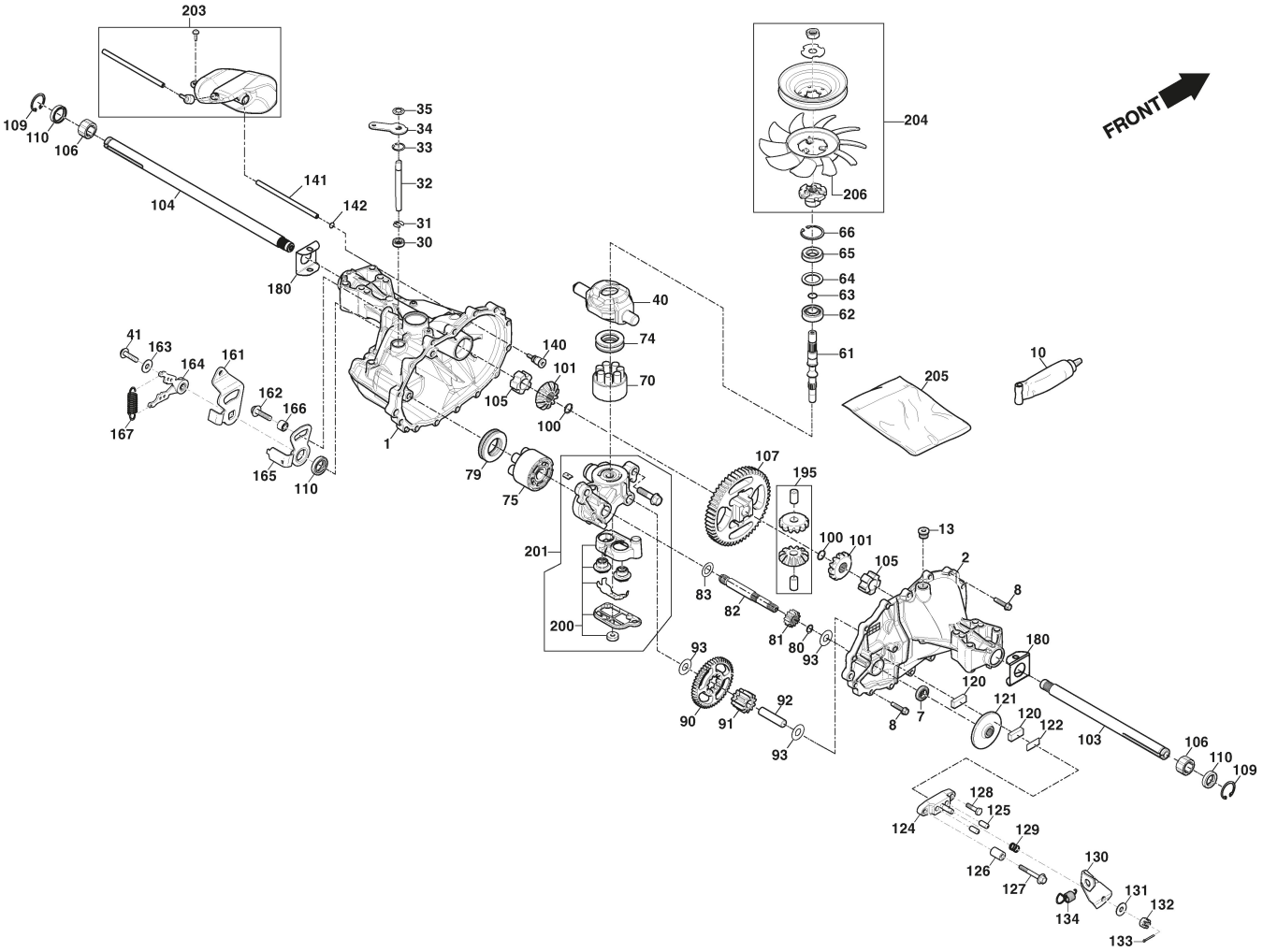

Copyright ST. S.P.A.

Transmission Unit, Hydro-Gear T2-ADBF-2X3C-17X1

Ref.nr.	Qty	Item number	Description	Notes	From	Up to
1	1	118870120/0	Main Housing			
2	1	118870121/0	Side Housing			
7	1	118870111/0	Seal			
8	14	1139-2042-01	Screw			
10	1	1139-2022-01	Sealant			
13	1	1139-2010-01	Plug			
30	1	118870079/0	Seal			
31	1	118870081/0	Retaining ring			
32	1	1139-2203-01	Rod			
33	1	118870080/0	Retaining ring			
34	1	118870091/0	Arm			
35	1	118870082/0	Retaining ring			
40	1	118870090/0	Swashplate			
41	1	118870083/0	Screw			
61	1	118870092/0	Shaft			
62	1	1139-2001-01	Ball Bearing			
63	1	1139-2003-01	Wire Retaining Ring			
64	1	1139-2004-01	Spacer			
65	1	1139-2000-01	Lip Seal			
66	1	1139-2002-01	Retaining Ring			
70	1	118870125/0	Pump Block Assy			
74	1	118870093/0	Bearing			
75	1	1139-2063-01	Cylinder Block			
79	1	1139-2021-01	Thrust Bearing			
80	1	118870070/0	Retaining ring			
81	1	118870094/0	Gear			
82	1	118870095/0	Shaft			
83	1	118870096/0	Washer			
90	1	118870097/0	Gear			
91	1	118870098/0	Gear			
92	1	118870099/0	Pin			
93	3	1139-2016-01	Washer			
100	2	118870072/0	Retaining ring			
101	2	118870063/0	Gear			
103	1	118870114/0	Shaft			
104	1	118870113/0	Shaft			
105	2	118870086/0	Bushing			
106	2	118870085/0	Bushing			
107	1	118870100/0	Gear			
109	2	118870084/0	Retaining ring			
110	3	1139-2204-01	Shaft			
120	2	118870066/0	Brake Pad			
121	1	118870101/0	Brake			
122	1	118870067/0	Brake Pad Support			
124	1	118870119/0	Brake Caliper			

Copyright ST. S.P.A.

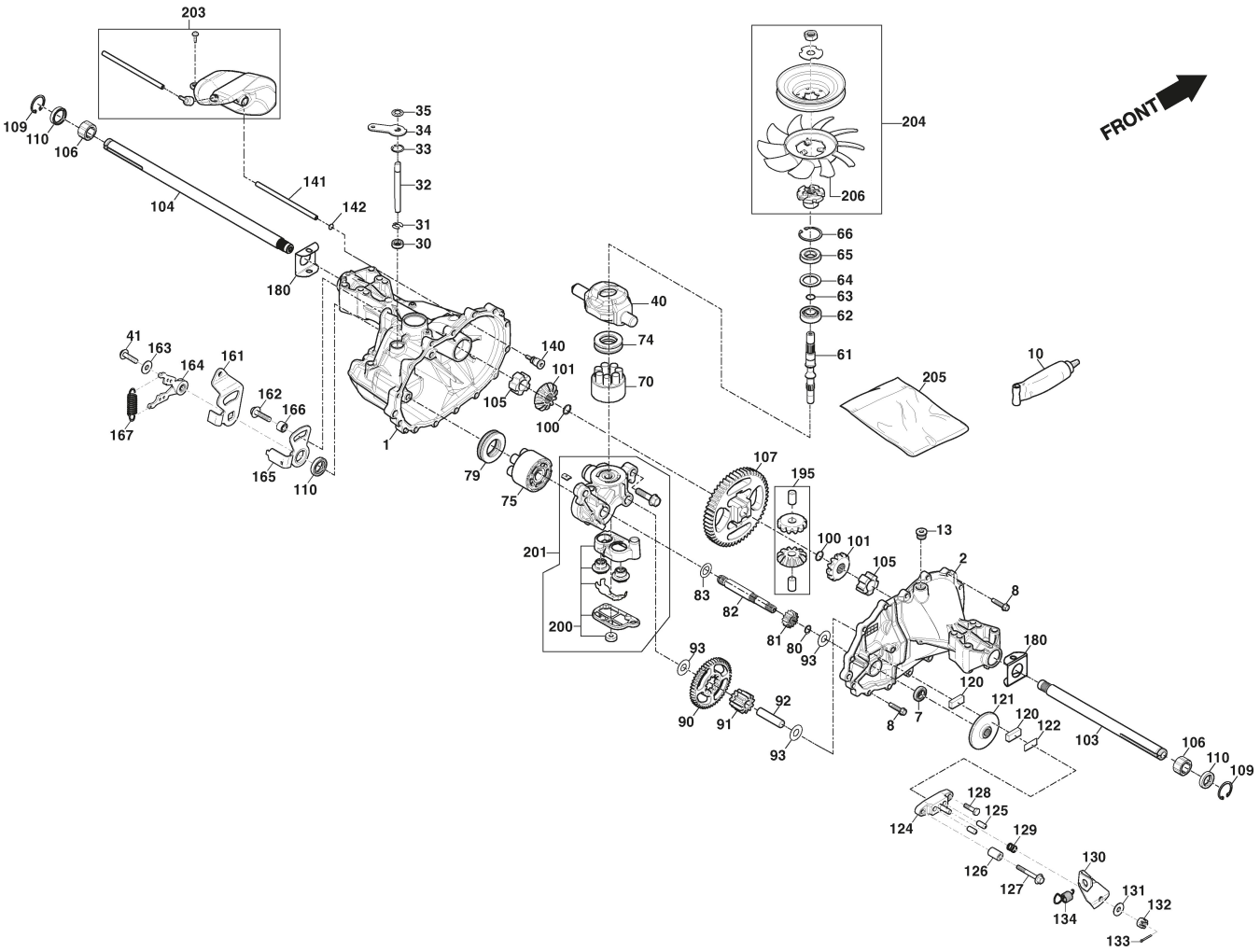

Copyright ST. S.P.A.

Transmission Unit, Hydro-Gear T2-ADBF-2X3C-17X1

Ref.nr.	Qty	Item number	Description	Notes	From	Up to
125	2	118870069/0	Pin			
126	1	118870062/0	Spacer			
127	1	118870077/0	Screw			
128	1	118870071/0	Bolt			
129	1	118870076/0	Spring			
130	1	118870088/0	Brake Lever			
131	1	1139-2011-01	Flat washer			
132	1	118870068/0	Nut			
133	1	118870065/0	Pin			
134	1	118870078/0	Spring			
140	1	1139-2038-01	Fitting			
141	1	118870102/0	Tube			
142	1	1139-2075-01	O-Ring			
161	1	118870103/0	Arm			
162	1	1139-2026-01	Bolt			
163	1	1139-2011-01	Flat washer			
164	1	118870107/0	Arm Assy			
165	1	118870108/0	Arm			
166	1	118870104/0	Bushing			
167	1	118870089/0	Spring			
180	2	118870112/0	Plate			
195	1	118870126/0	Kit-Gears and Pins			
200	1	118870123/0	Kit-Filter			
201	1	118870127/0	Center Section Kit			
203	1	118870122/0	Kit-Expansion Tank			
204	1	118802723/0	Fan Kit			
205	1	118870124/0	Kit-Seal			
206	1	118870130/0	Fan			

Copyright ST. S.P.A.