ASSLY. DETAIL FOR TP-5560

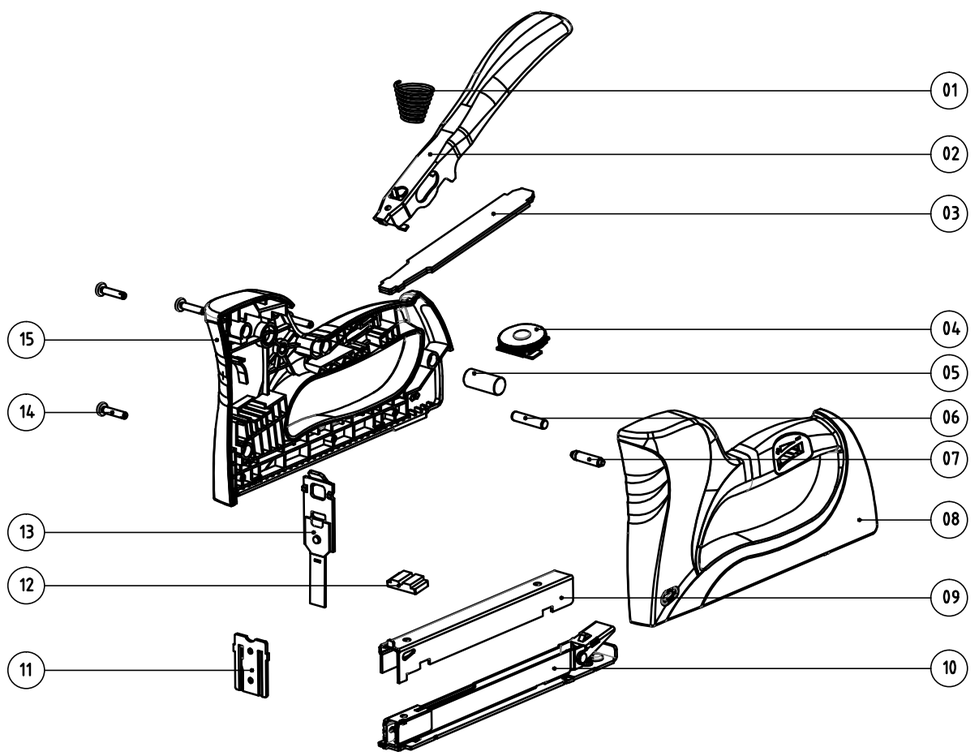

S.No.	DESCRIPTION	ORDER CODE
01	TOP SPRING	
02	HANDLE STEEL	
03	LEAF SPRING	
04	FORCE ADJUSTER ASSLY.	
05	HANDLE PIN	
06	HANDLE SUPPORT PIN	
07	STOP PIN	
08	SIDE COVER (FRONT)	
09	MAGAZINE	
10	STAPLE GUIDE UNIT	
11	FRONT PLATE	
12	RUBBER BUMPER	
13	BLADE PUNCH ASSLY.	
14	SCREW	
15	SIDE COVER (REAR)	