texi®

Culture of Sewing

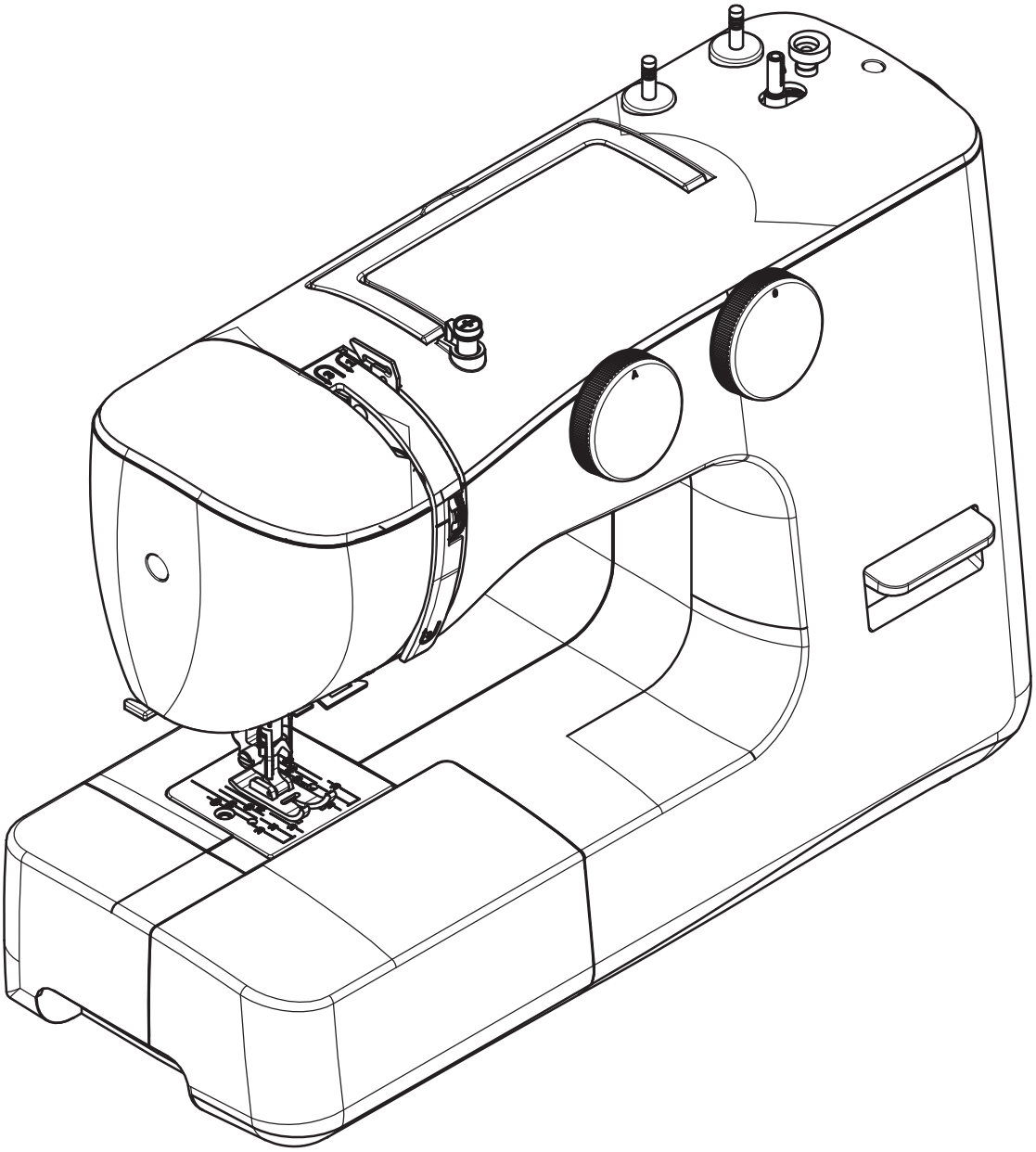

Texi Fox 25

SERVICE MANUAL

CONTENTS

1.DISASSEMBLY AND ASSEMBLY FOR COVER

2.MECHANICAL ADJUSTMENT

3.CAVEAT

DISASSEMBLY AND ASSEMBLY FOR COVER

FACE COVER

TO REMOVE
Remove the setscrews (A) and (B) to remove the face cover.
TO ATTACH
Attach the face cover in reverse procedure of the removing.

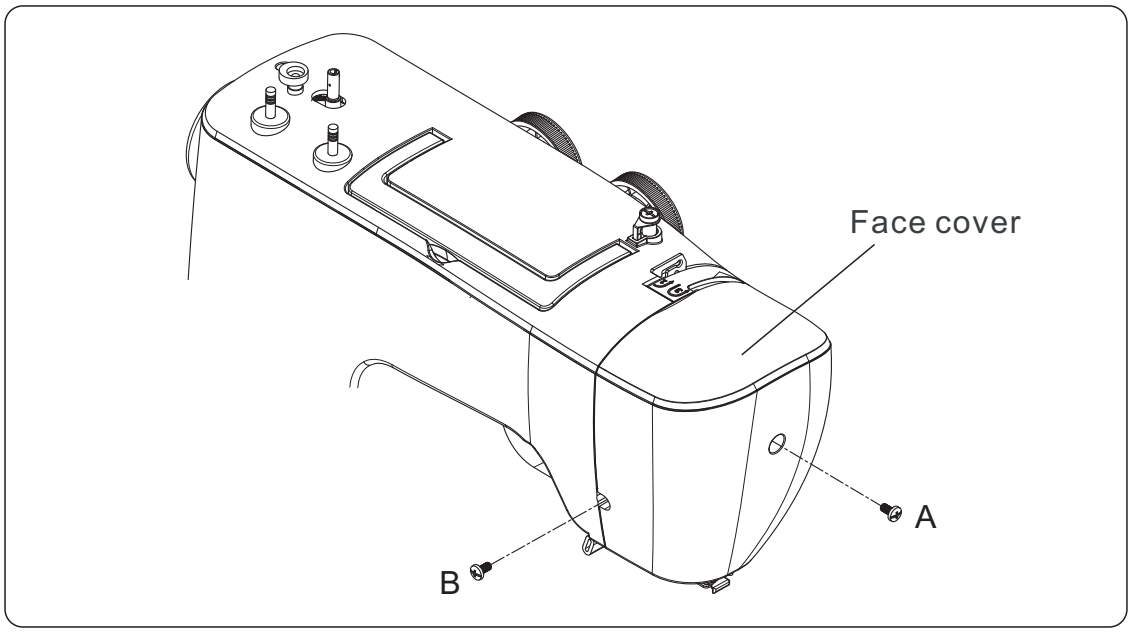

TOP COVER

TO REMOVE
Remove the setscrews (A), (B) and (C) to remove the top cover.
TO ATTACH
Attach the top cover in reverse procedure of the removing.

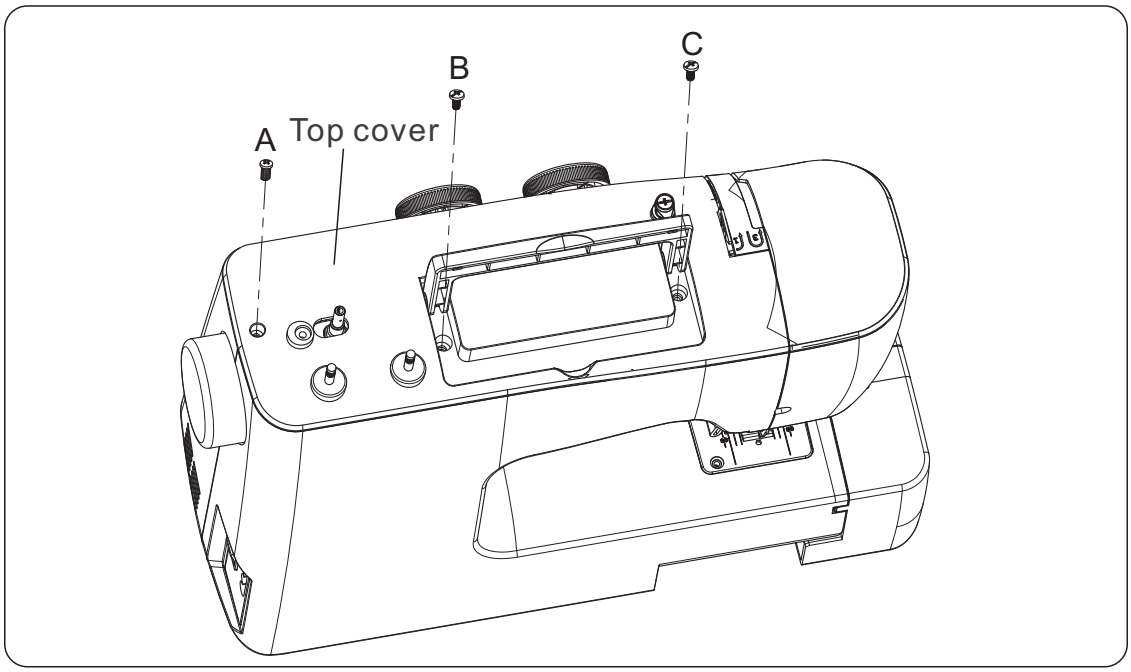

DISASSEMBLY AND ASSEMBLY FOR COVER

BASE PLATE

TO REMOVE

1. Pull out the accessories box. (See pic.1)
2. Remove the setscrews (A), (B), (C) and (D) to remove the base plate. (See pic.2)

TO ATTACH

Attach the base plate in reverse procedure of the removing.

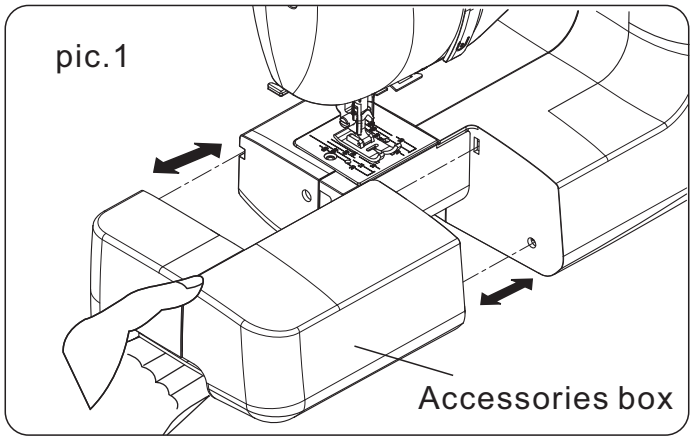

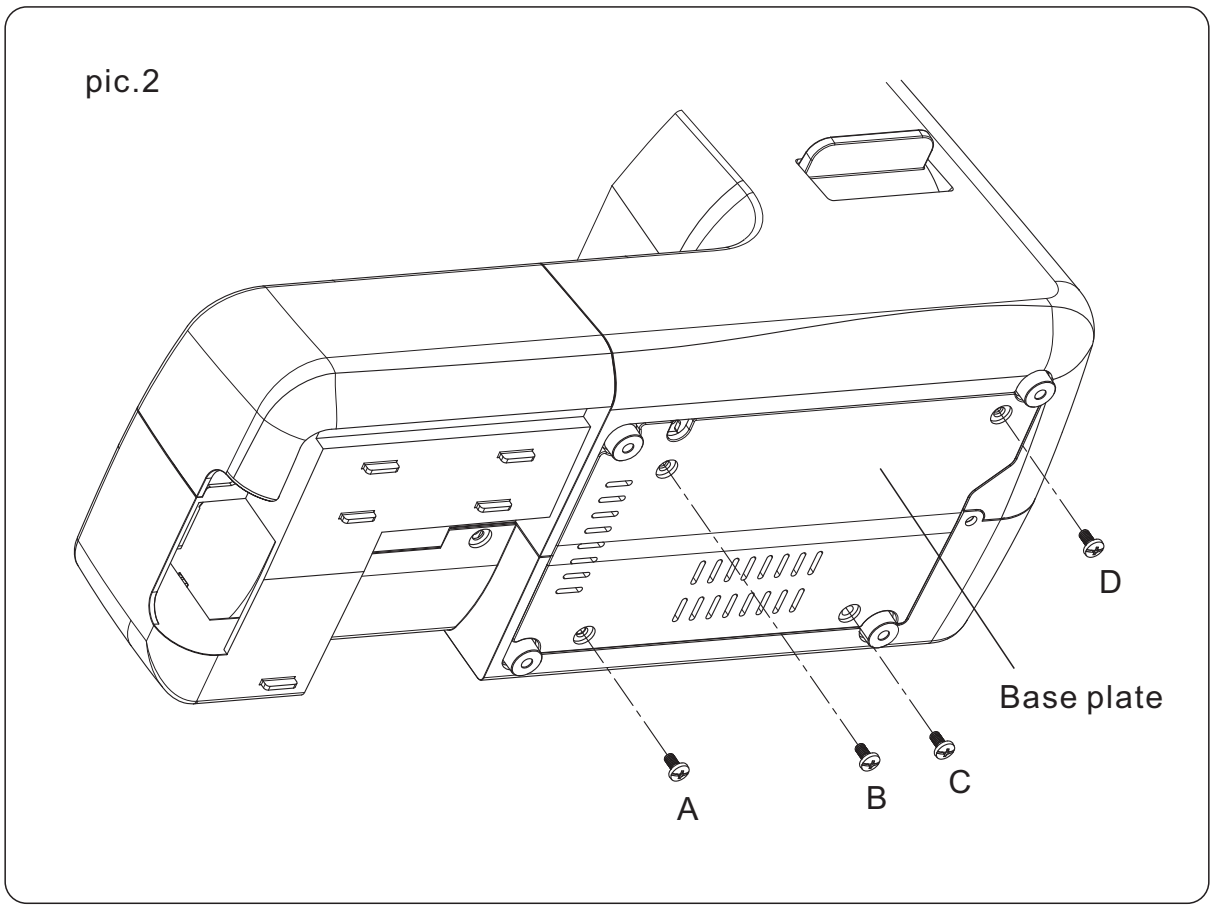

DISASSEMBLY AND ASSEMBLY FOR COVER

FRONT COVER

TO REMOVE

1. Remove the setscrews (A), (B). (See pic.1)
2. Remove the setscrews (C) and (D). (See pic.2)
3. Remove the setscrews (E) and (F). (See pic.3)
4. Remove the knobs (G) and (H). (See pic.4).
5. Remove the front cover.

TO ATTACH

Attach the front cover in reverse procedure of the removing.

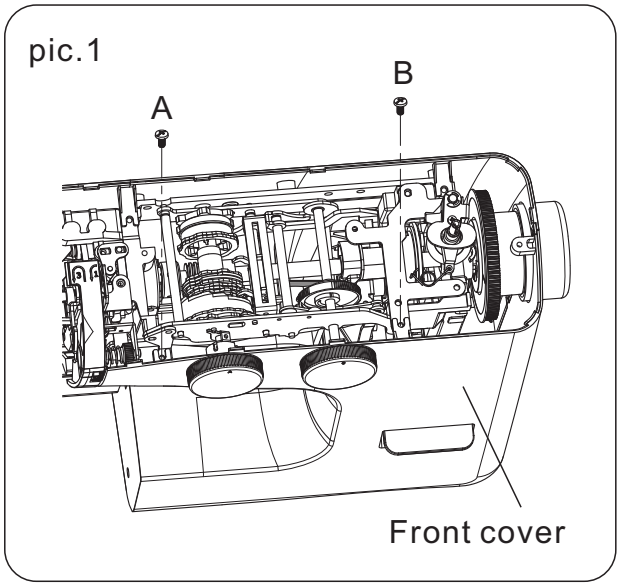

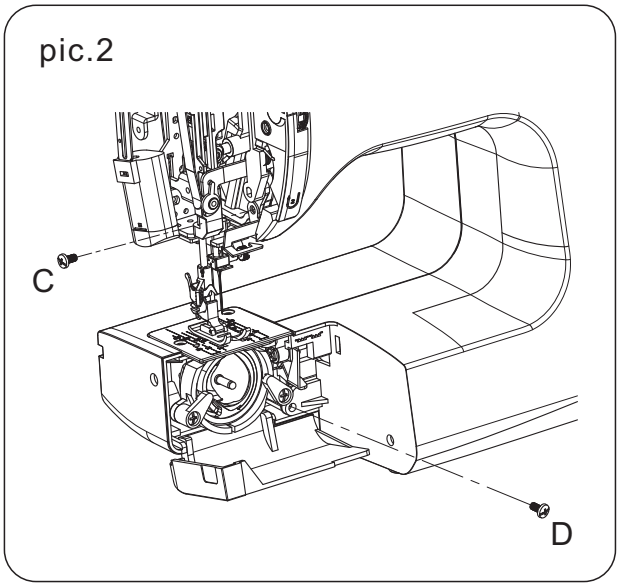

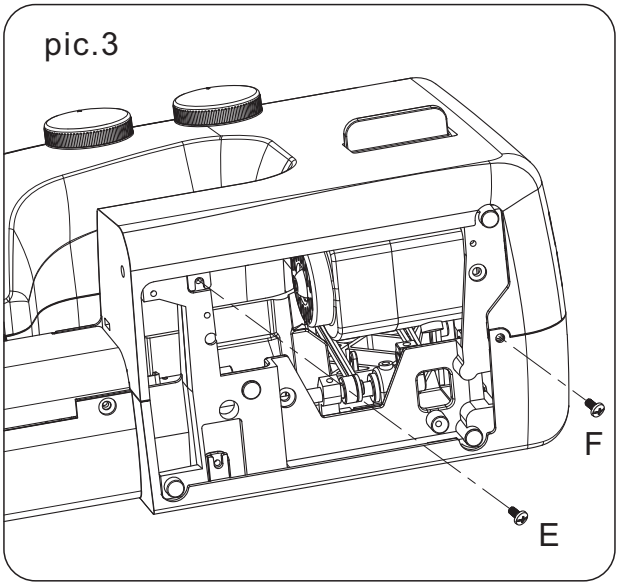

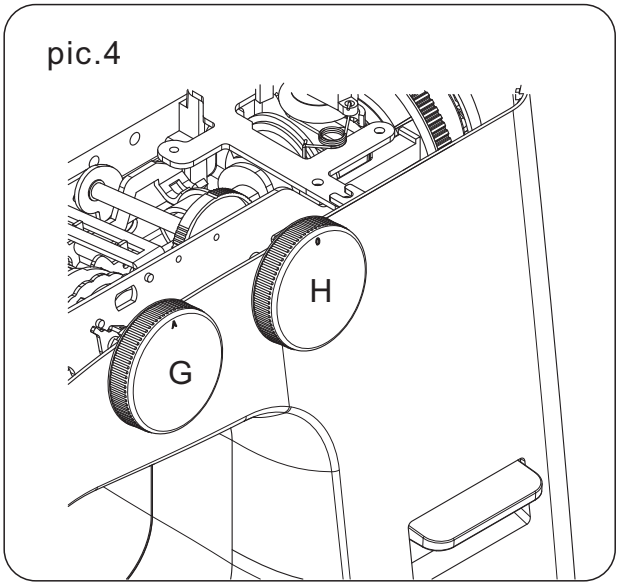

DISASSEMBLY AND ASSEMBLY FOR COVER

REAR COVER

TO REMOVE

1. Remove the setscrews (A) and (B). (See pic.1)
2. Remove the setscrew (C). (See pic.2)
3. Remove the setscrew (D). (See pic.3)
4. Lift the presser foot lever, remove the rear cover clearing the presser foot lifter from the slit on the cover.

TO ATTACH

Attach the rear cover in reverse procedure of the removing.

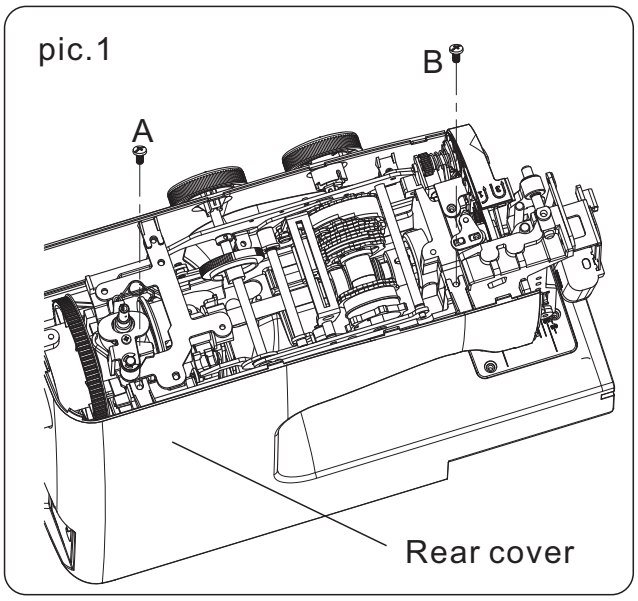

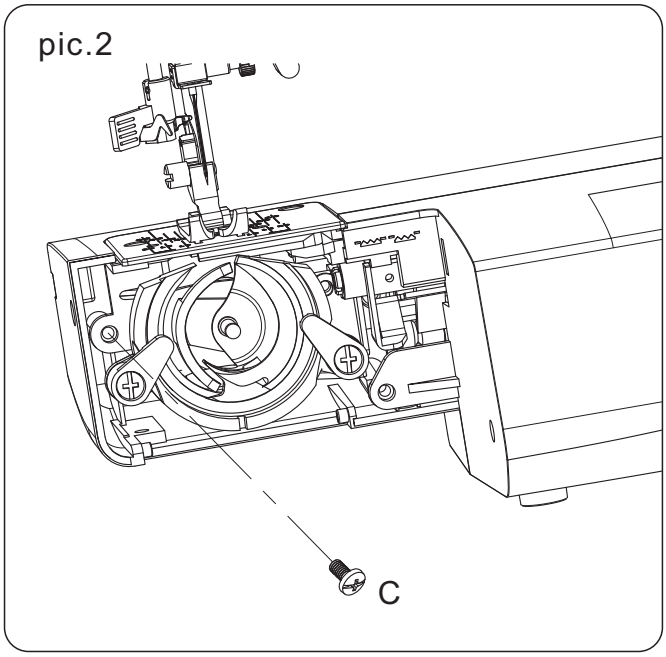

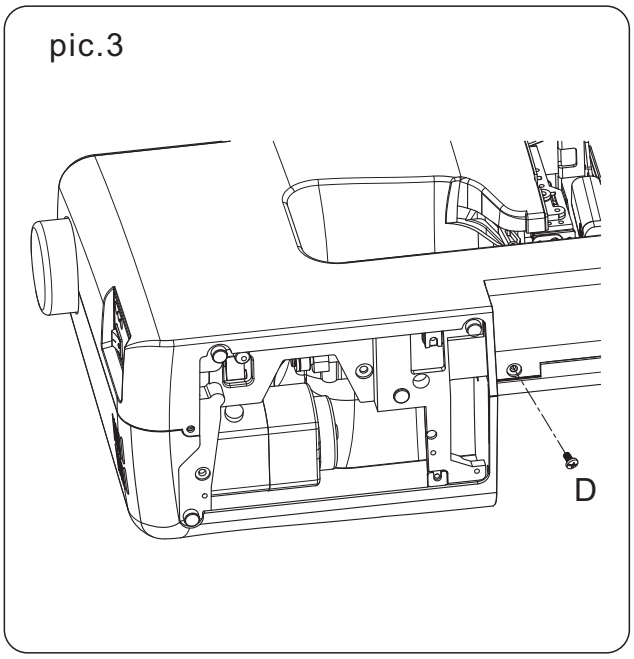

TOP TENSION

TO CHECK

The top tension should be between 70~90g when pulling the thread up. (See pic.1)
If it is not within the above limit, adjust as follows:

ADJUSTMENT PROCEDURE :

1. Remove the face cover, top cover, base plate and front cover (See page 2-4).
2. Set the tension dial at “4”. (See pic.2)
3. Lower the presser foot. (See pic.3)
4. Check the tension of top thread by a tension meter.
   If the top tension is too loose, turn the nut (C) in the direction (A). (See pic.4)
   If the top tension is too tight, turn the nut (C) in the direction (B). (See pic.4)
5. Recheck the top tension .
6. Attach the covers.

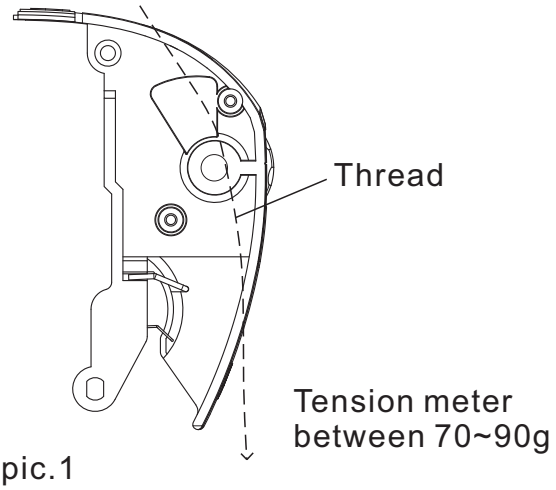

pic.1

pic.2

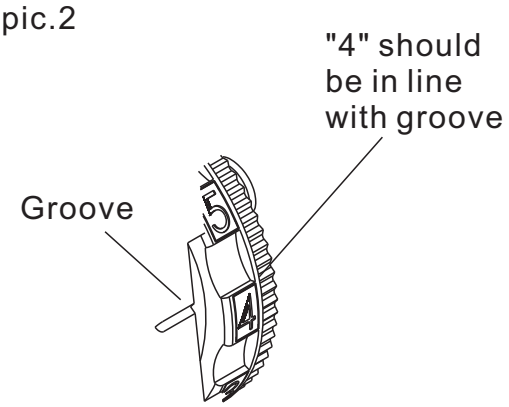

pic.3

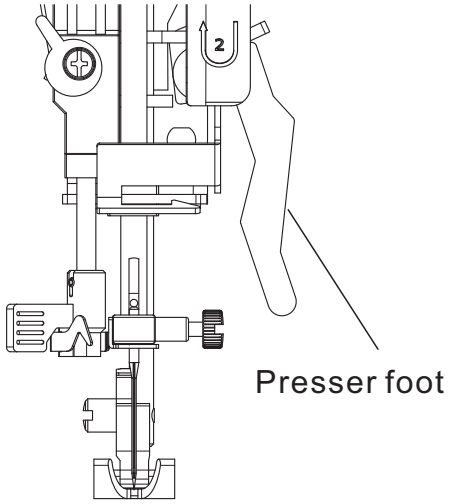

pic.4

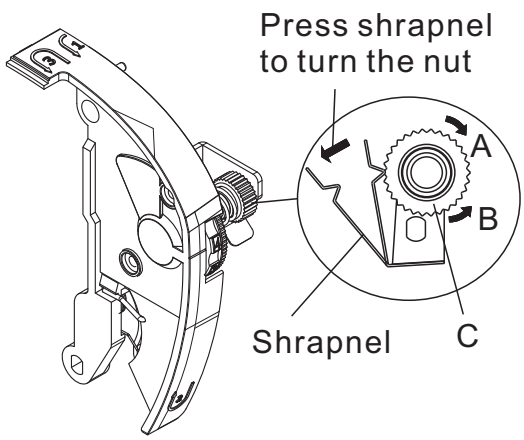

BOBBIN TENSION

TO CHECK:

The bobbin thread tension should be between 35~45g when pulling the thread by a tension meter.
If it is not within the above limit, adjust as follows:

ADJUSTMENT PROCEDURE :

1. Turn the adjusting screw (C) in the direction of (B) when the bobbin thread tension is too tight.
2. Turn the adjusting screw (C) in the direction of (A) when the bobbin thread tension is too loose.
3. Recheck the bobbin tension.

pic.1

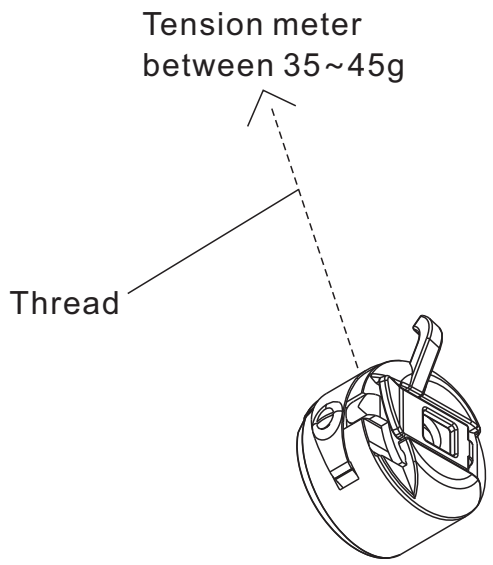

pic.2

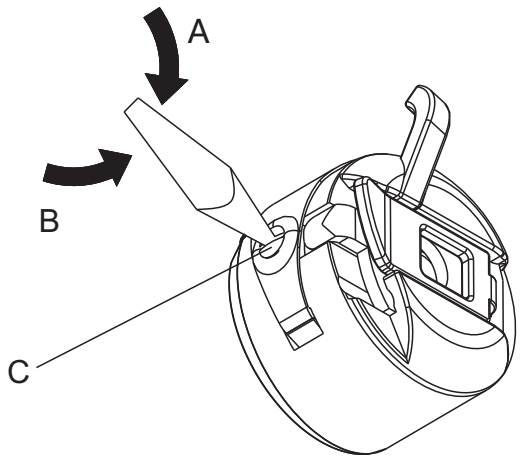

PRESSER BAR HEIGHT AND ALIGNMENT

TO CHECK:

1. The distance between the presser foot (D) and the needle plat (E) should be between 5.5-6.0mm when lift the presser foot lever (A).
2. The presser foot should be cover the feed dog slots and parallel with it when you put down the presser foot lever (A).

If it is not within the above limit, adjust as follows:

ADJUSTMENT PROCEDURE :

1. Remove the face cover (See page 2).
2. Loosen the setscrew (B) to remove the LED lamp.
3. Raise the presser foot lever (A) and loosen the setscrew (C) on presser bar holder.

*** Push up or down the presser bar to adjust the high of presser foot.**

*** Horizontal rotation the presser bar to adjust the parallelism of presser foot.**

4. Tighten the setscrew (C) after adjustment.
5. Attach the LED lamp and the face cover.

NOTE: **When you tighten the setscrew (C), make sure that both sides of the presser foot are parallel to the feed dog slots (F) on the needle plate.**

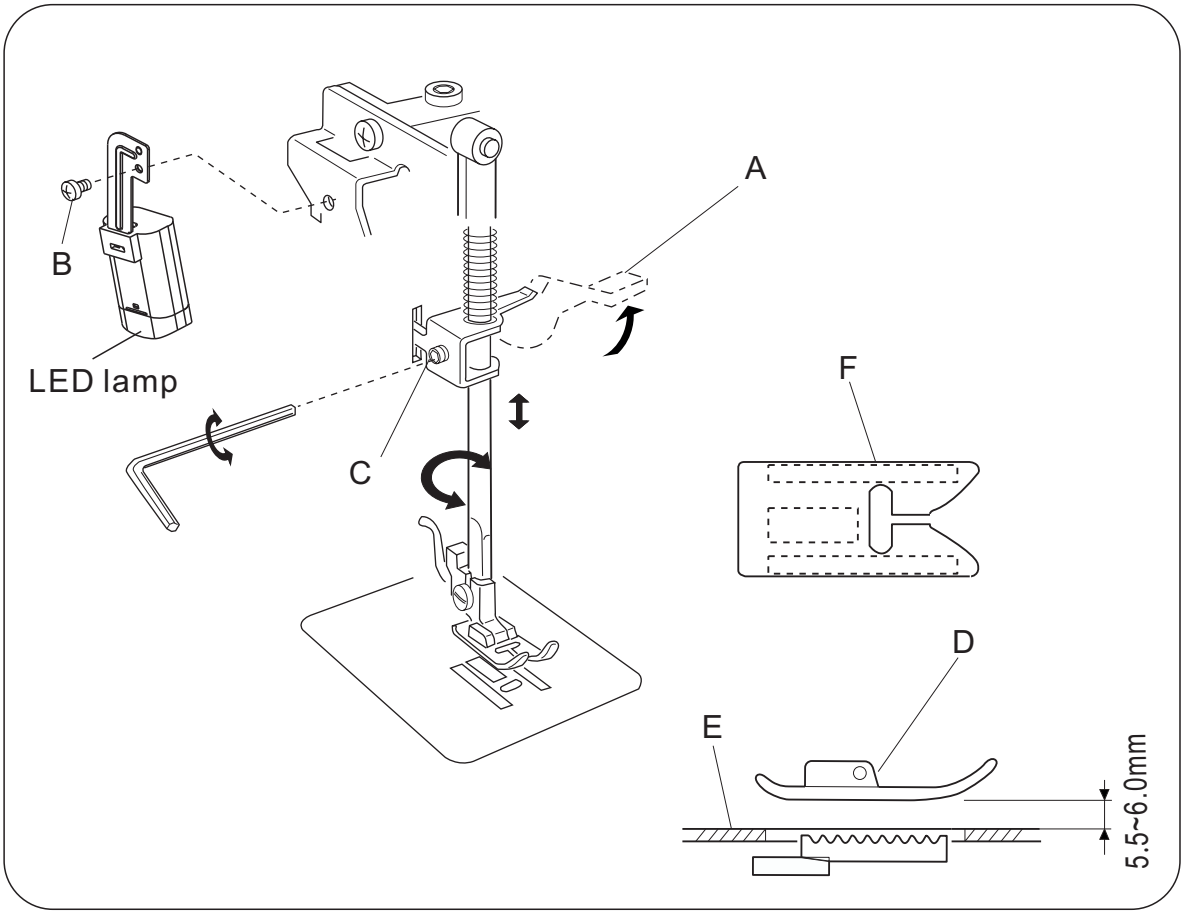

NEEDLE SWING

TO CHECK:

Adjust the needle swing according to the following procedure, if the needle bar starts moving sideways while the needle is in the fabric when sewing the zigzag pattern (with maximum zigzag width).

ADJUSTMENT PROCEDURE:

1. Turn the pattern knob to "C" ( ).
2. Remove all machine covers (See page 2-5).
3. Loosen two setscrews.
4. Adjust the needle swing by turning the handwheel while holding the worm so as not to rotate it, until the needle swing starts at 3~6mm above the needle plate after the needle has come out of the right side of the needle hole.
5. Tighten two setscrews.
6. Recheck the needle swing.
7. Attach all machine covers.

NOTE: After adjusting the needle swing, check that the upper shaft worm and gear rotate smoothly without any backlash between them.

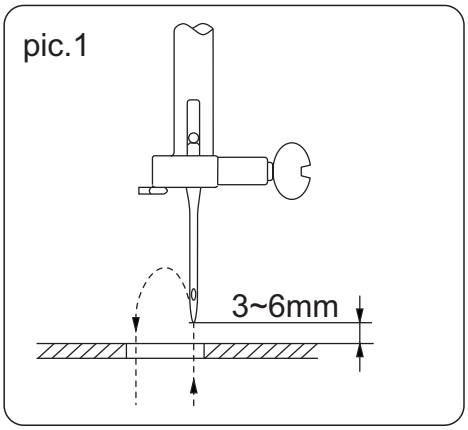

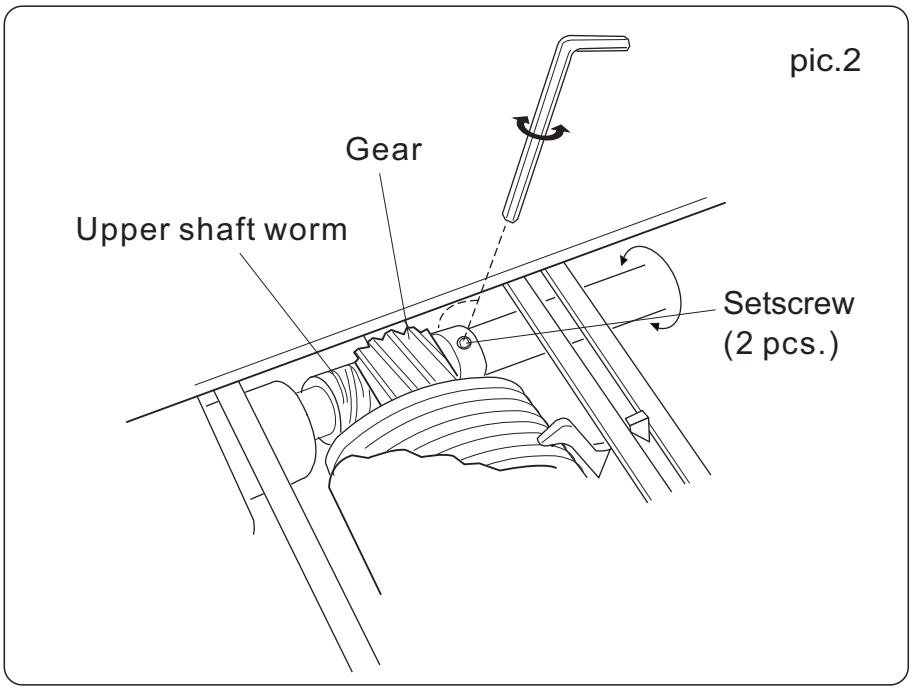

NEEDLE DROP

TO CHECK:

When the needle swings in maximum zigzag width, the distance between both ends of the needle hole on the needle plate and the needle drop positions should be equal.

If it is not within the above limit, adjust as follows:

ADJUSTMENT PROCEDURE:

1. Remove the face cover (See page 2).
2. Turn the pattern knob to “C” ( ).
3. Loosen the setscrew (A).
4. Turn the eccentric wheel to adjust the needle drop.
5. To check the distance between both ends of the needle hole on the needle plate and the needle drop positions should be equal.
6. Tighten the setscrew (A).
7. Recheck the needle drop.
8. Attach the face cover.

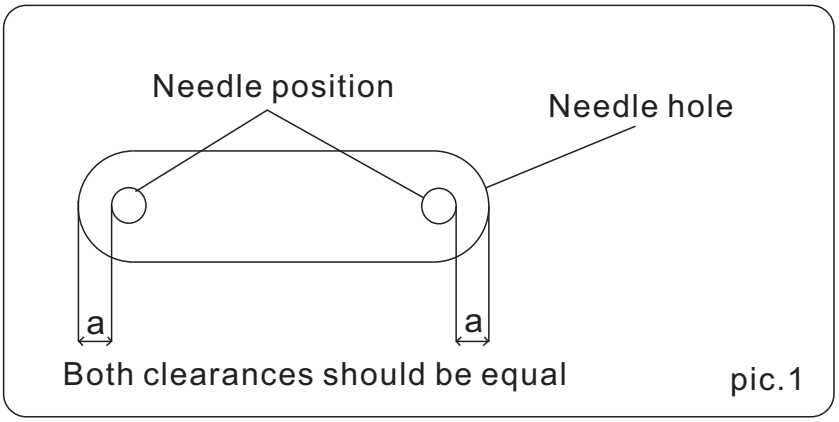

pic.1

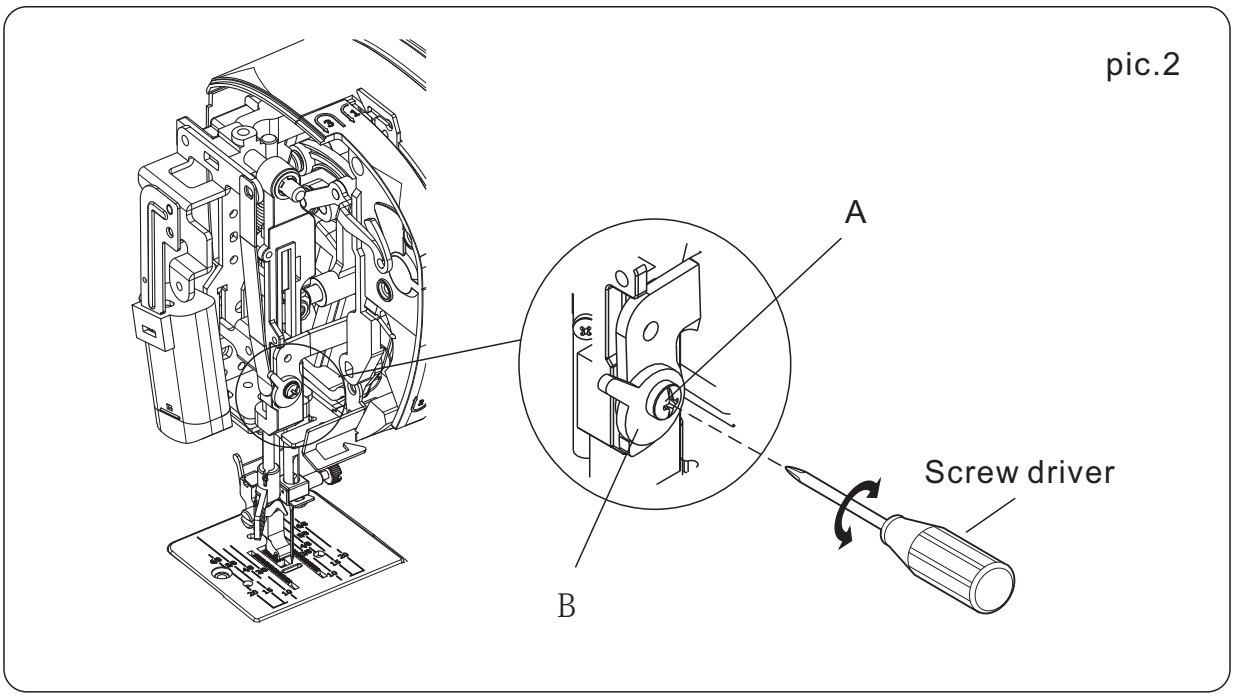

pic.2

CLEARANCE BETWEEN NEEDLE AND HOOK (ADJUSTMENT METHOD NO.1)

TO CHECK:

The clearance between the needle and shuttle race should be 0~0.1mm.
If it is not within the above limit, adjust as follows:

ADJUSTMENT PROCEDURE:

1. Remove the face cover (Refer to page 2), open the shuttle cover, then remove the shuttle race cover and the bobbin case.
2. Set the pattern select dial at “B” ( ) .
3. Loosen the setscrew “A” as pic. 2.
4. Move the needle bar supporter (B) in the direction of the arrows to adjust the clearance.
   If clearance is too wide, move the needle bar supporter to direction (D).
   If clearance is too narrow, move the needle bar supporter to direction (E).
5. Tighten the setscrew (A).
6. Recheck the clearance.
7. Attach the face cover.

NOTE: After this adjustment, check the clearance between the needle and needle plate.

*** If it is correct and same as pic.3, then the adjustment is finished.**

*** If not same as pic.3, adjust according to above procedure firstly and adjust the clearance between needle and shuttle race by using adjustment method No. 2 (see next page).**

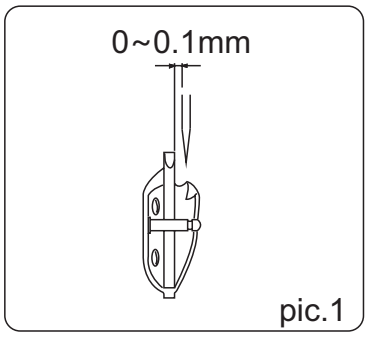

pic.1

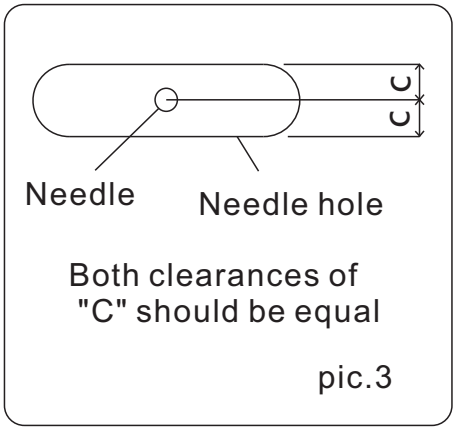

pic.3

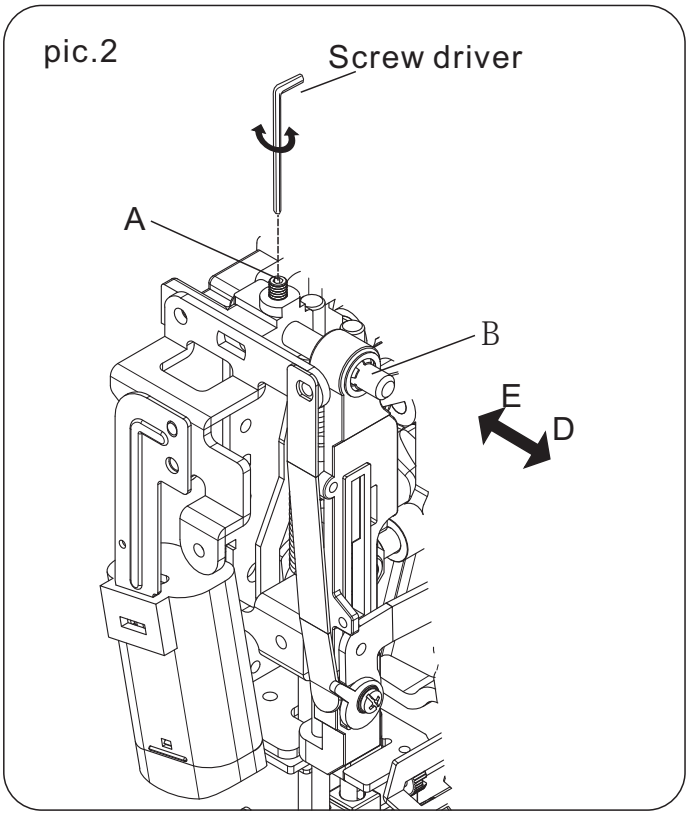

CLEARANCE BETWEEN NEEDLE AND HOOK (ADJUSTMENT METHOD NO.2)

TO CHECK:

Use this adjustment method NO. 2 if the clearance cannot be adjusted by the method NO.1.
The clearance between the needle and shuttle race should be 0~0.1 mm.
If it is not within the above limit, adjust as follows:

ADJUSTMENT PROCEDURE :

1. Set the pattern selector dial at "B" ( ).
2. Remove all covers (See page 2-5) and remove the shuttle and the shuttle race cover.
3. Loosen the setscrew (A) on the lower shaft bushing and slide the gear about 0.5 mm to the right to create some slack between the gears.
4. Lower the needle and loosen the two shuttle race setscrews (B).
   Move the shuttle race unit axially either forward or backward to adjust the clearance between the needle and the shuttle race in the range of 0~0.1 mm.
5. Set the pattern select dial at "C " ( ), turn the handwheel to check if the clearance between the needle and inner edges of the shuttle race spring at the left and right needle drops are equal.
   If not, adjust by turning the shuttle race unit.
6. Tighten the two shuttle race setscrews (B).
7. Loosen the setscrew on the lower shaft bushing and slide the gear back to the original position while adjusting the backlash.
8. Tighten screw (A) firmly.
9. Attach all the covers.

NOTE: The rotary play of the tip of the shuttle driver should be less than 0.3 mm and the lower shaft should turn smoothly.
After the adjustment, check the hook timing.

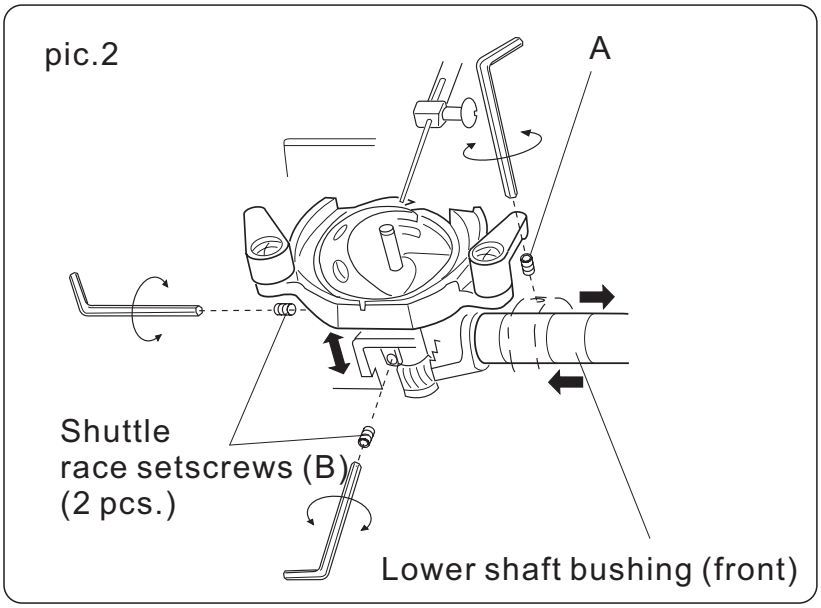

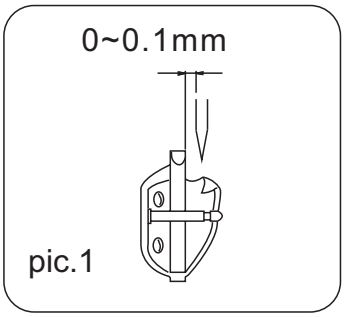

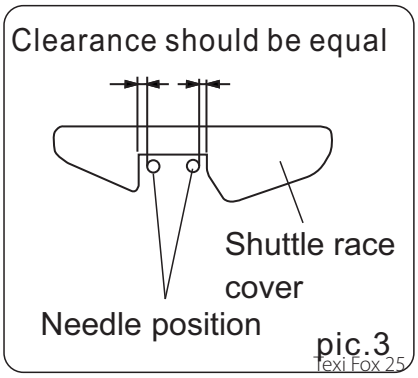

FEED DOG HEIGHT

TO CHECK:

Lift the presser foot and turn the hand wheel towards you to bring the feed dog to its highest position. The height of the feed dog from the needle plate should be between 0.9~1.1mm. (Pic.1)

If it is not within the above limit, adjust as follows:

ADJUSTMENT PROCEDURE:

1. Raise the presser foot and turn the hand wheel towards you to bring the feed dog to its highest position.
2. Remove the accessories box and open the shuttle cover.
3. Loosen the setscrew (A).
4. Turn the screw (B) to adjust the height of feed dog.
5. After finishing, tighten the setscrew (A).
6. Turn the handwheel toward you to recheck the height of the feed dog.
7. Attach the accessories box.

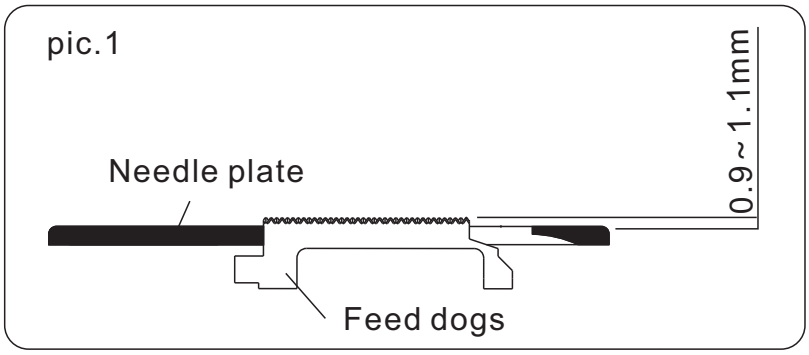

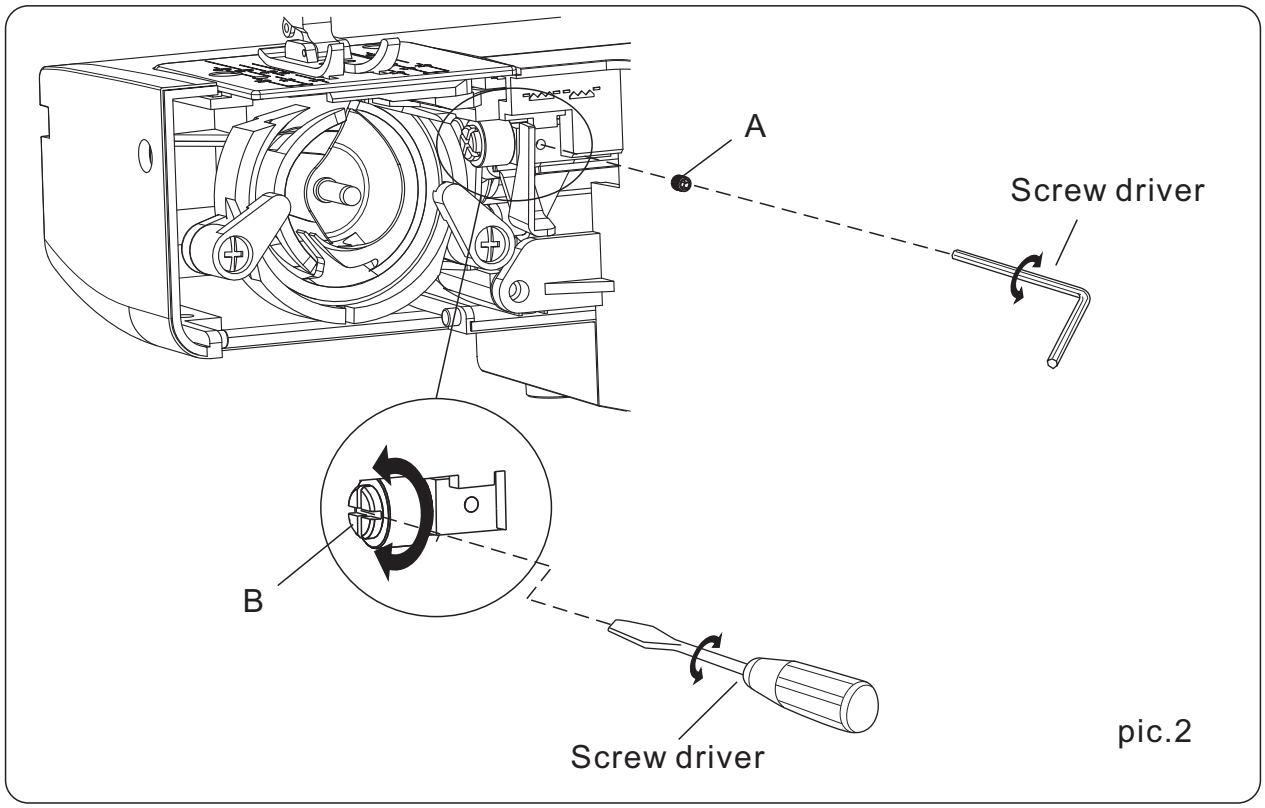

NEEDLE HEIGHT

TO CHECK:

Turn the pattern dial to “B” ( ), then turn the handwheel until the needle is in its left and lowest position, the distance between the tip of the needle (C) and the inner hole wall of shuttle (B) should be in the range of 0~0.4mm.
If it is not in the range, adjust as follows:

ADJUSTMENT PROCEDURE:

1. Remove the face cover (See page2), open the shuttle cover, remove the shuttle and the shuttle race cover.
2. Turn the pattern dial to “B” ( ).
3. Turn the handwheel toward you until the needle is in its left and lowest position.
4. Loosen the setscrew (A), Adjust the height of needle by moving the needle bar upward or downward without turning it.
5. Tighten the setscrew (A).
6. Recheck the needle height.
7. Attach the shuttle race cover and shuttle, close the shuttle cover and attach face cover.

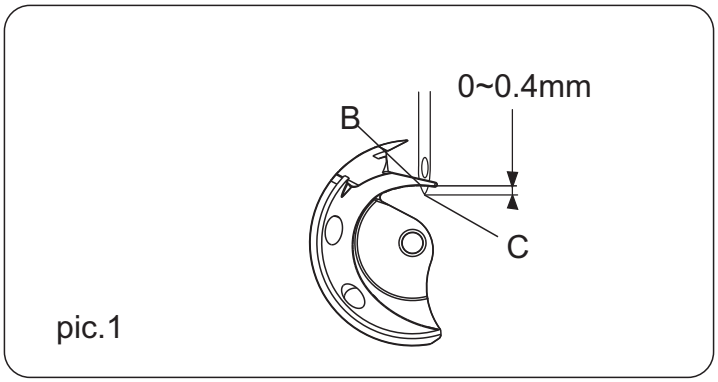

pic.1

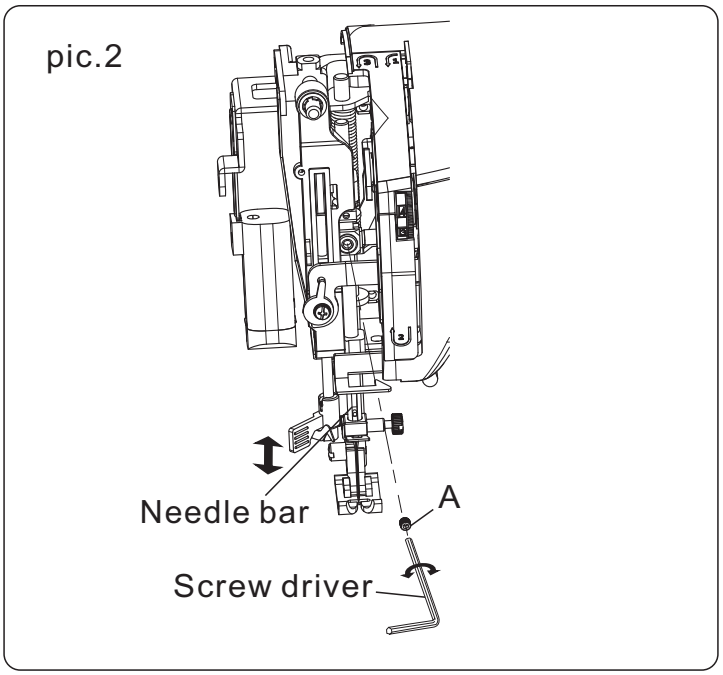

pic.2

NEEDLE TIMING TO SHUTTLE

TO CHECK:

When the needle at the right needle position, when the tip of the shuttle hook (E) meets the right side of the needle in ascending travel of the needle from its right and lowest position, the distance between the top of the needle eye (F) and the tip of the shuttle hook (E) should be in the range of 0.8~1.2mm.
If it is not within the above limit, adjust as follows:

ADJUSTMENT PROCEDURE:

1. Remove the face cover (See page 2), open the shuttle cover, remove the shuttle and the shuttle race cover.
2. Turn the pattern dial at “C” (⦚).
3. Loosen the setscrews (A) and (B), turn the lower shaft crank to adjust the needle timing.
4. Tighten the setscrews (A) and (B).
5. Recheck the needle timing.
6. Attach the shuttle cover and shuttle, close the shuttle cover and attach the face cover.

pic.1

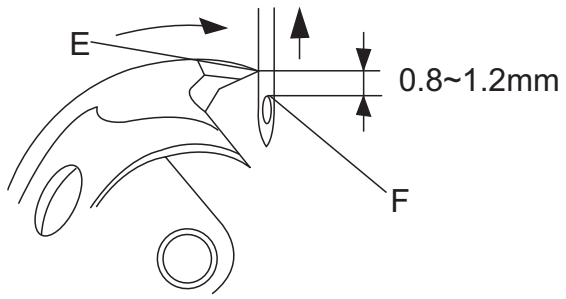

pic.2

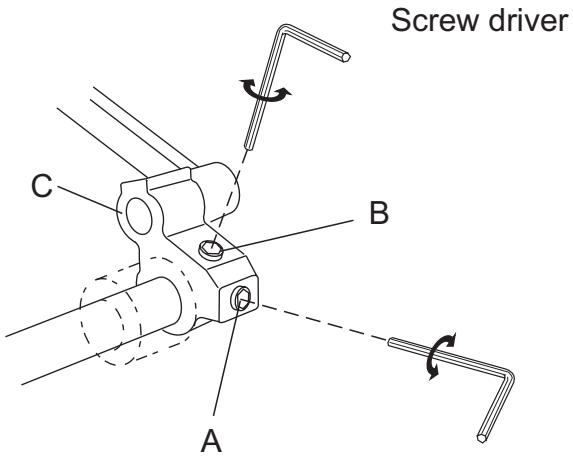

FEED BALANCE ON STRETCH STITCH

TO CHECK:

Turn the pattern dial at “D” ( ), and set the stitch length dial at “SS”, the stretch pattern should be same as the first one on pic 1.
If it is distorted as A or B on pic. 1, adjust as follows:

ADJUSTMENT PROCEDURE:

1. Remove the top cover. (See page 2)
2. Turn the adjusting screw (E).
   If same as A, turn the screw (E) in the direction (C).
   If same as B, turn the screw (E) in the direction (D).
3. Recheck the stretch pattern.
4. Attach the top cover.

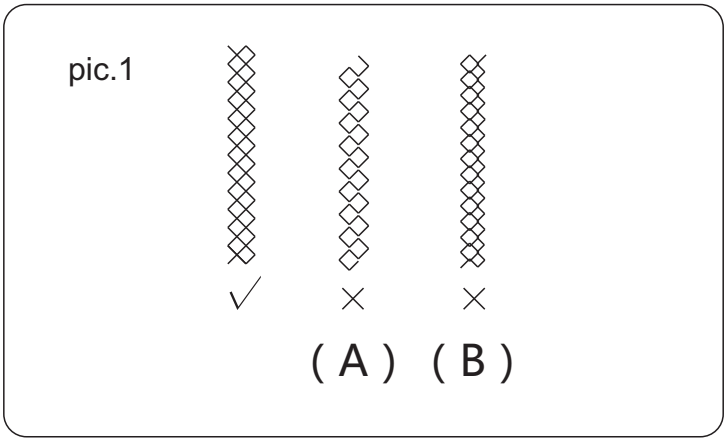

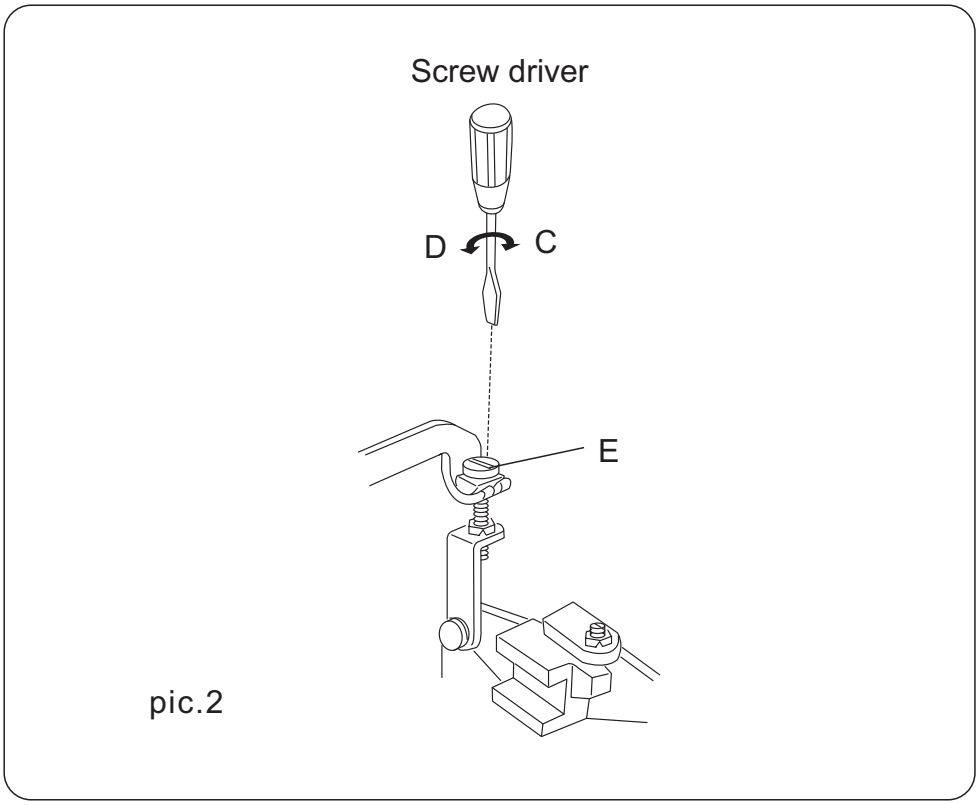

BARTACK FEED OF BUTTONHOLE

TO CHECK:

If the material is fed forward or backward when sewing bartack on buttonhole, make an adjustment as follows:

ADJUSTMENT PROCEDURE:

1. Turn the pattern dial on “ ”.
2. Remove the face cover, top cover, base plate and front cover (See page 2-4).
3. Turn the adjusting screw.
   Place a piece of paper under the foot and turn the handwheel.
   If the paper is fed forward, turn the adjusting screw in the direction of (C).
   If the paper is fed backward, turn the adjusting screw in the direction of (D).
4. Recheck the bartack of buttonhole.
5. Attach the covers.

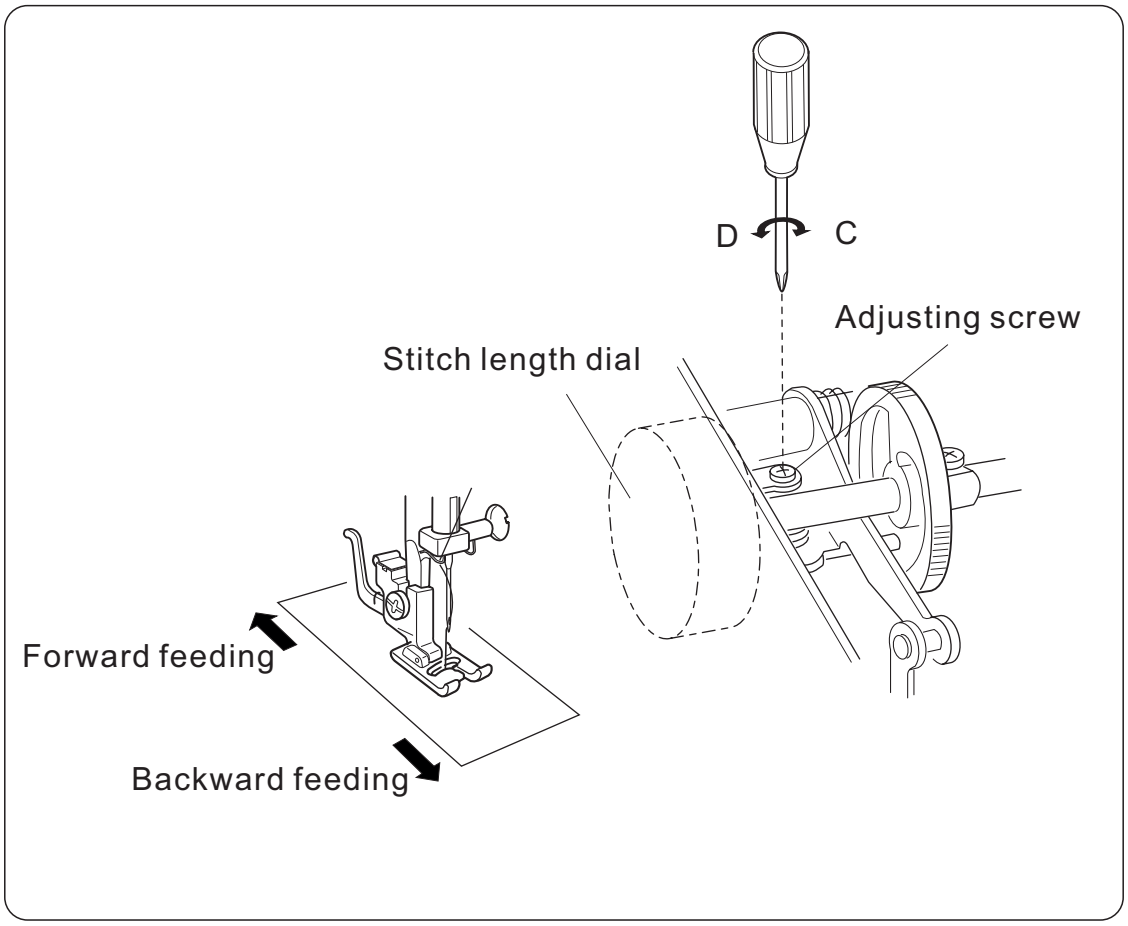

BUTTONHOLE FEED BALANCE

TO CHECK:

When sewing buttonhole, the stitches on each side of buttonhole should be the same stitch density.

If it is same as A or B on pic. 1, adjust as follows:

ADJUSTMENT PROCEDURE:

1. Remove the top cover.
2. Turn the adjusting screw (E).

* If same as A, turn the pattern knob to 1, turn the screw (E) in the direction (C).

* If same as B, turn the pattern knob to 3, turn the screw (E) in the direction (D).

3. Recheck the buttonhole density.
4. Attach the top cover.

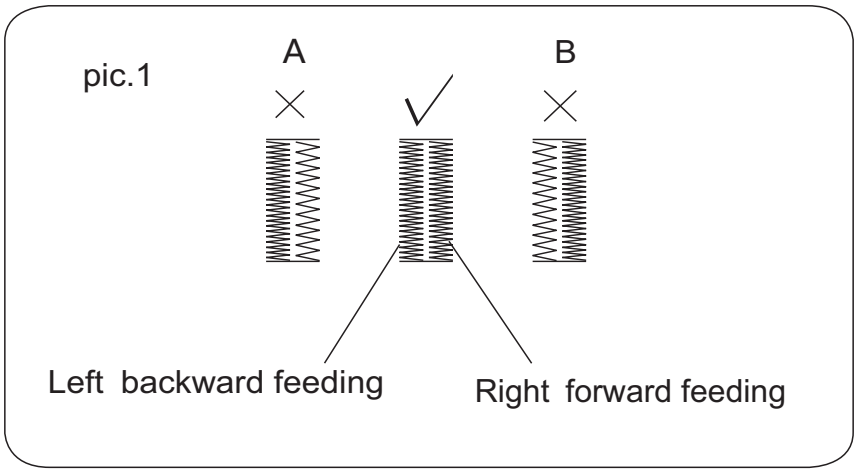

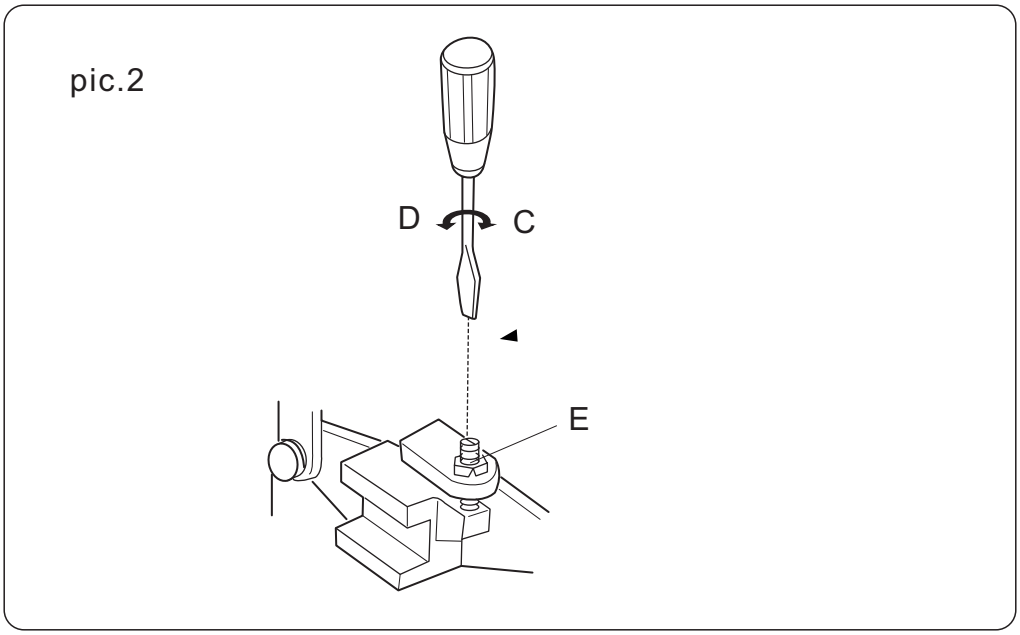

DISENGAGEMENT OF CAM FOLLOWER

TO CHECK:

Too narrow clearance between the cam follower and the top convex of zigzag cam may often cause difficulty in turning of the pattern selector dial, or cannot turn to correct pattern.

ADJUSTMENT PROCEDURE:

1. Set the pattern selector dial “B” (⊃).
2. Remove the face cover, top cover, base plate and front cover (See page 2-4).
3. Adjust the screw (A).
4. Push the cam follower to the zigzag cam (straight cam) (See pic.1), and also put the cam follower releasing arm to the pattern select cam (See pic 2).
5. Tighten the screw (A).
6. Recheck the cam follower.
7. Attach the covers.

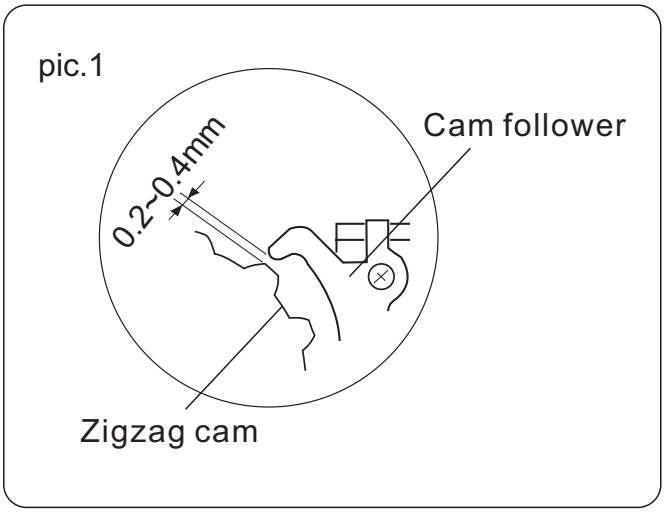

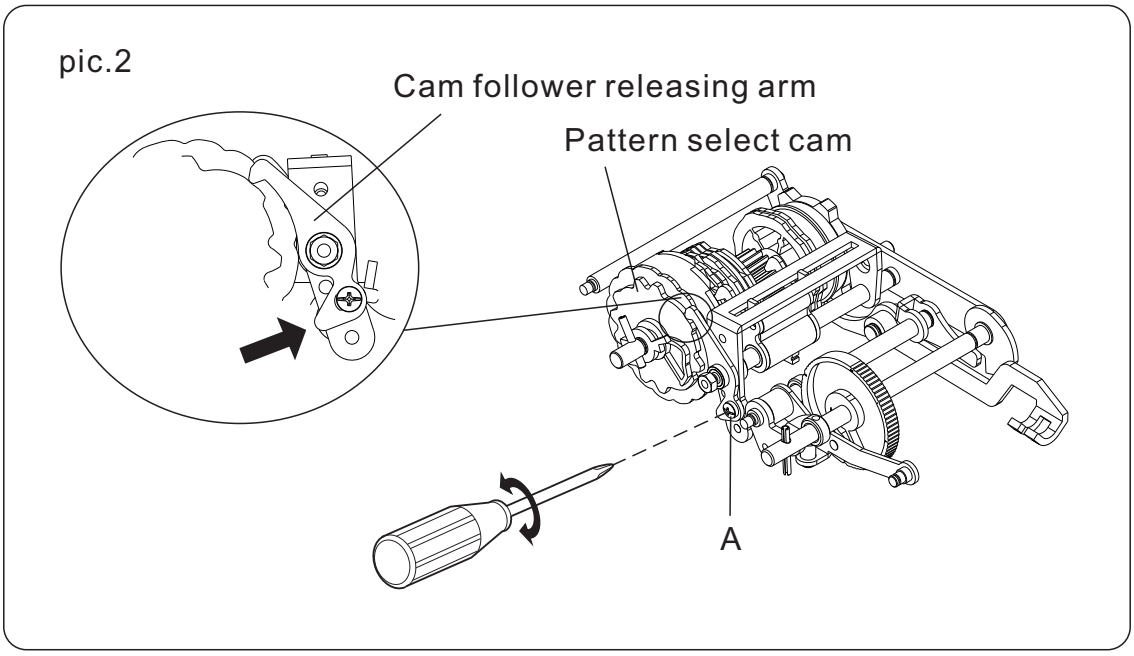

FOOT PAD HEIGHT

TO CHECK:

Put the machine on a plain level, gently shaking the machine, the sewing machine should be no vibration.
If there is vibration, adjust as follows:

ADJUSTMENT PROCEDURE:

1. Turn the foot pad (A) to adjust the height of the foot pad.
2. Recheck the machine.

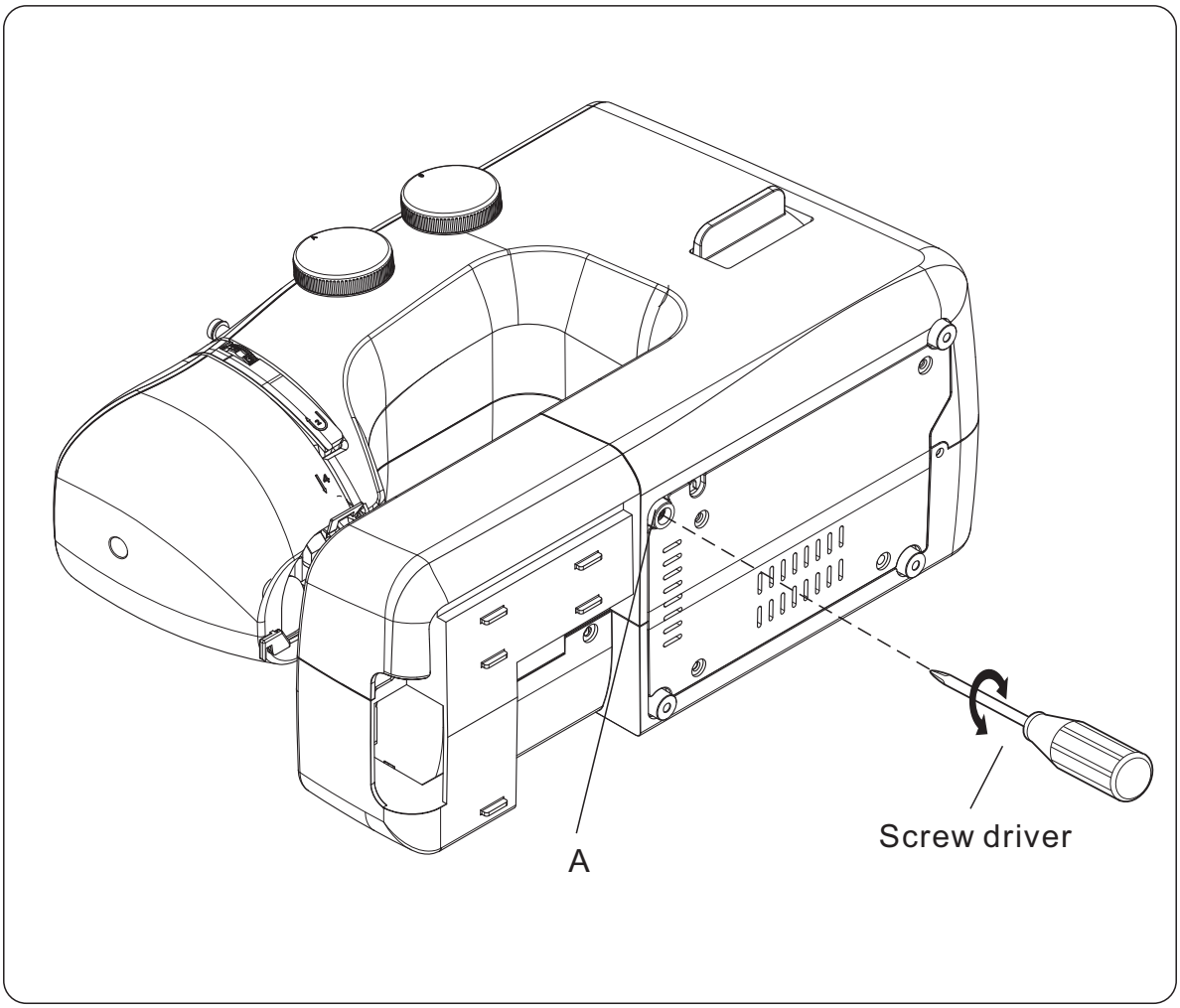

BOBBIN WINDING

TO CHECK:

The bobbin winding volume should reach 80%-90%, and no uneven winding surface.

If it is not within the above limit, adjust as follows:

ADJUSTMENT PROCEDURE:

1. Loosen the setscrew (A).
2. Turn the position limit block (B) to adjust the bobbin winding volume.
3. Tighten the setscrew (A).
4. Recheck.

*** If the winding surface is uneven, adjust the height of the bobbin winding adjusting unit (C).**

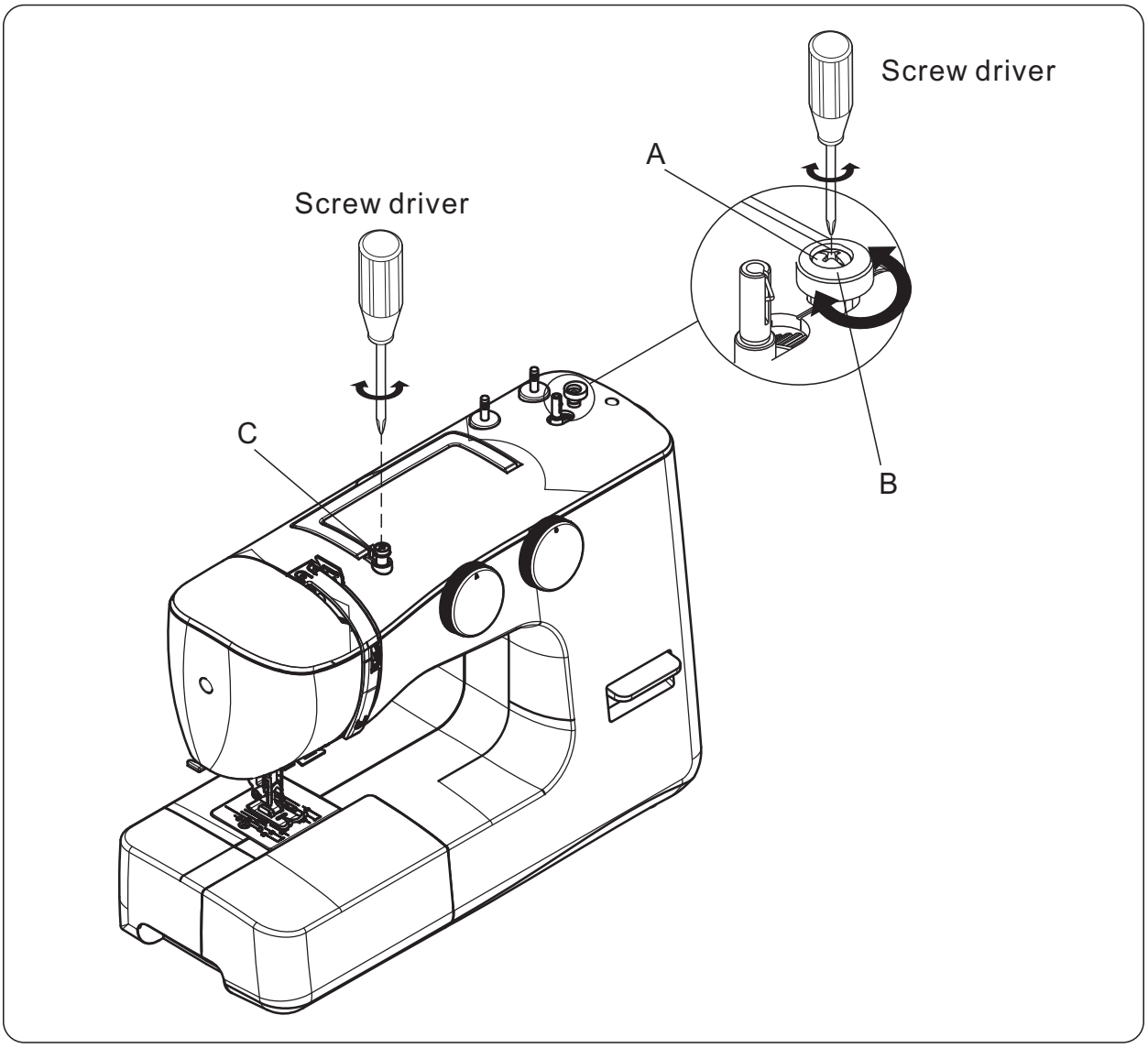

AUTOMATIC THREADER POSITION

TO CHECK:

When the needle is on the highest position, check if the threading by automatic threader is working.

If automatic threader cannot work properly, adjust as follows:

ADJUSTMENT PROCEDURE:

1. Remove face cover (See page2).
2. Loosen the setscrew (A).
3. Turn the hand wheel to raise the needle to its highest position. Pull down the threader lever and turn the threader hook into the needle hole.
4. Push the position limit block (B) to highest place.
5. Tighten the setscrew (A).

NOTE: Setscrew (A) should be in one line with the screw(C).

6. Recheck the threader position.
7. Attach the face cover.

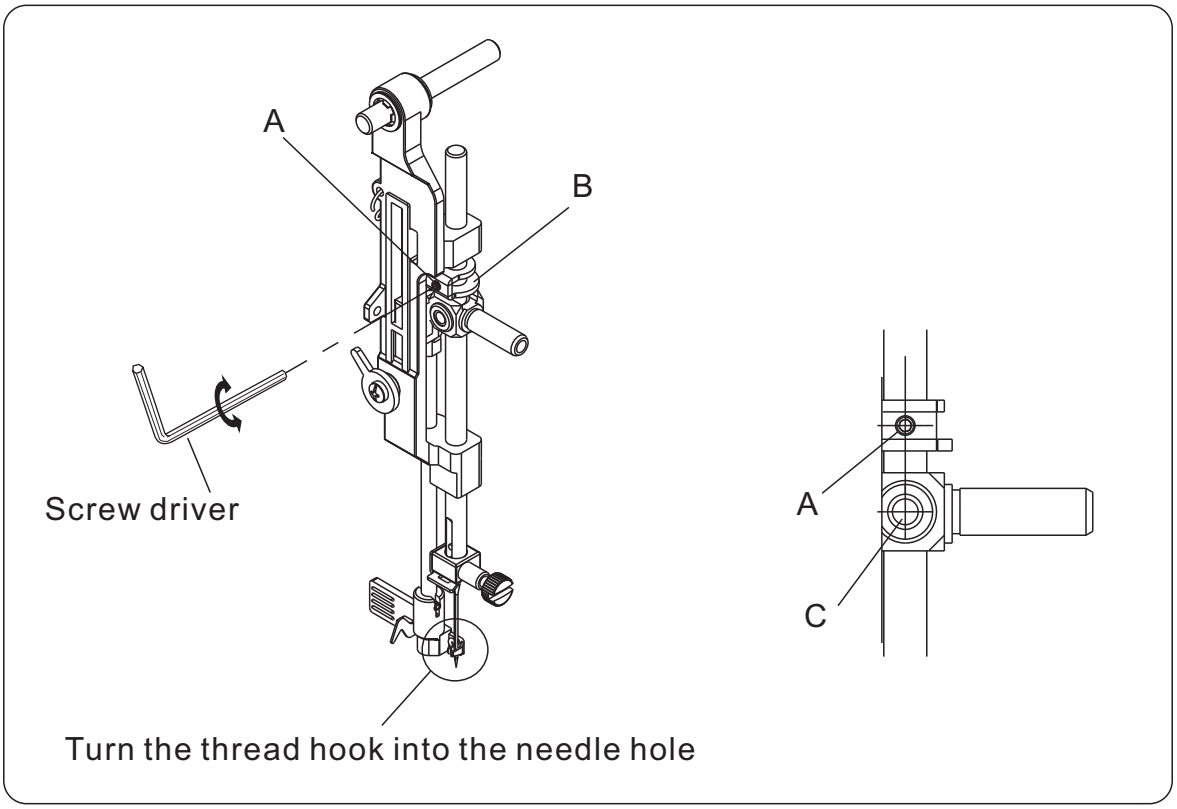

MOTOR BELT TENSION

TO CHECK:

1. If the motor belt tension is too tight or too loose, it can cause a belt noise.
   If the tension is too tight, it can cause the machine to run slowly and the motor to overload.
   If the tension is too loose, it can cause the belt teeth on the motor pulley to jump.
2. The correct motor belt tension is when the deflection of motor belt is about 7mm ~ 9mm. (When pushing the motor belt by finger with a 300 gram load.)
   If belt tension is not suitable, adjust as follows:

ADJUSTMENT PROCEDURE:

1. Remove the face cover, top cover, base plate and front cover (See page 2-4).
2. Loosen the screws as pic.2.
3. Move the motor up or down to adjust the deflection about 7mm ~ 9mm.
4. Tighten the screws.
5. Attach the covers.

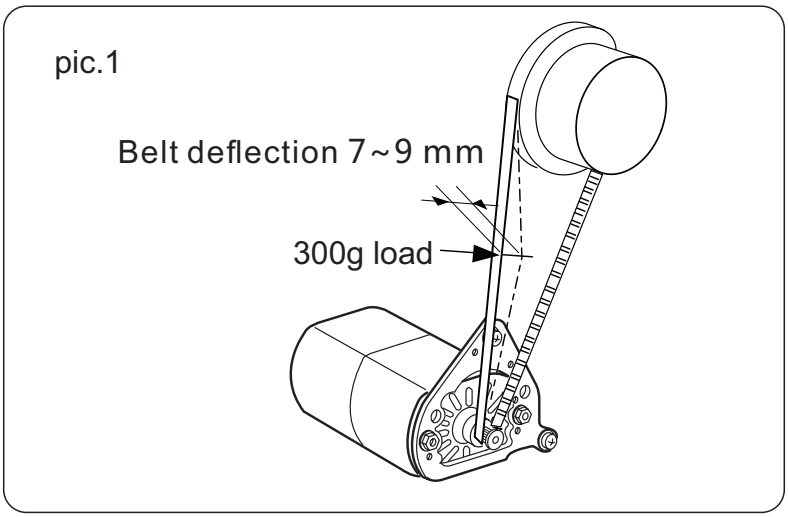

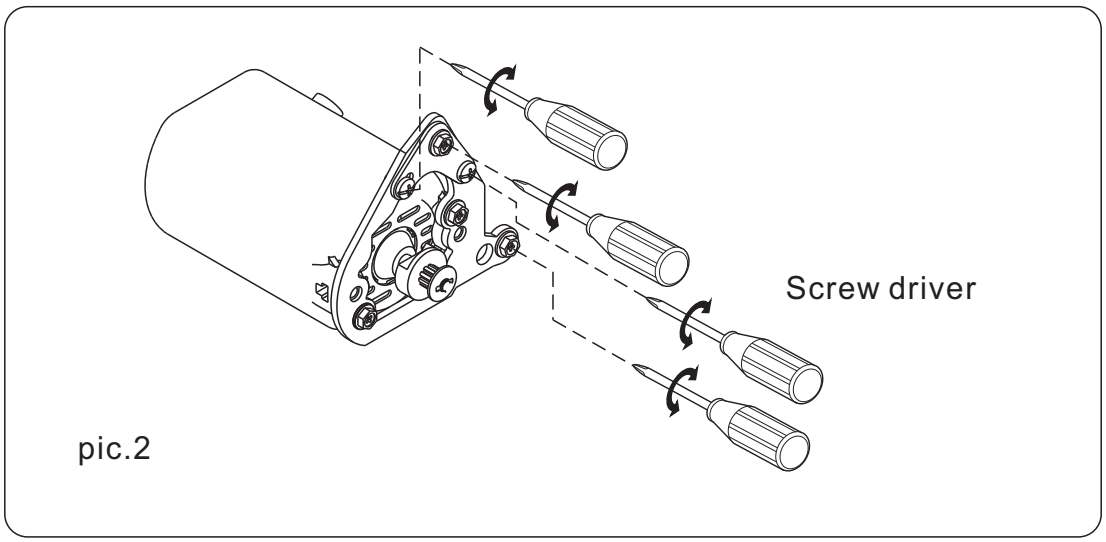

WIRING FOR SOCKET UNIT

1. Remove the all machine covers (Refer to page 2-5).
2. Remove the setscrews (A) and (B) as pic. 1, and remove socket.
3. Remove the setscrews (C) and (D) as pic. 2, and open the socket cover.
4. Wiring as pic. 3.
5. Attach the socket and all covers in reverse procedure of the removing.