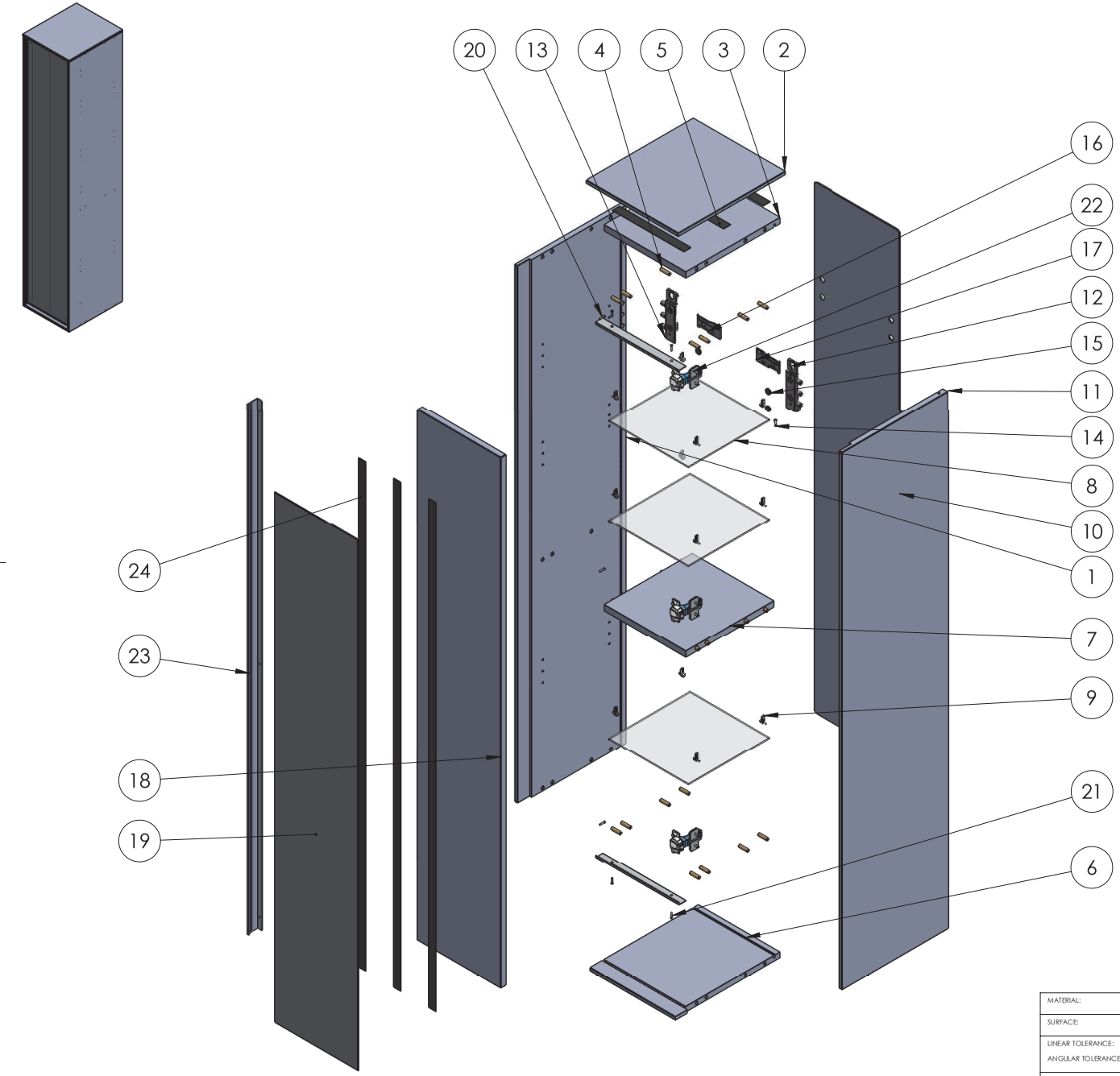

No. ARTICLE	NUMERO DE PIECE	configuration	QTE
1	ADEO17036-202-02 Side Column FRAME Left	350 without Hinge	1
2	ADEO-17036-205-02 Top Column FRAME	300x350	1
3	ADEO-17036-205-02 Top 2 Column FRAME	300x350	1
4	Wood Dowel 8x30	Défaut	24
5	Tape 24mm	TAPE 24mm Length 235	3
6	ADEO-17036-203-02 Bottom Column FRAME	300x350	1
7	ADEO-17036-207 shelf Column FRAME	268x289	1
8	ADEO-17036-207 glass shelf Column FRAME	262.5 x 268	3
9	Cleat for glass schelve	POLIPLAST 196	12
10	ADEO-17036-204-02 Back panel Column FRAME	Back panel Column FRAME	1
11	ADEO17036-202-02 Side Column FRAME Right	350 with Hinge	1
12	HANGER SH6401 Right	GRASS with anti-uprising (VAUTH-SAGE NR.F155147942223)	1
13	HANGER SH6401 Left	GRASS with anti-uprising (VAUTH-SAGE NR.F155147941223)	1
14	Screw 3.5x20	FOR HANGER	2
15	Hanger Cover	Hanger Cover	4
16	Steel_rail_column_DT	Ferramenta Perin	1
17	Steel_rail_column_GH	Ferramenta Perin	1
18	ADEO-17036-206-02 Door Column FRAME	Door HANDLE 1511 x 275	1
19	1510 x 274	1510 x 274	1
20	Mirror metal profil	274mm FRAME	2
21	Screw 3x16	For mirror metal profil	7
22	Hinge BLUM	BLUM F1B3680	3
23	ADEO-17036-304 Handle Column FRAME	1510	1
24	Tape 24mm	TAPE 24mm Length 1450	3

TOP : ADEO-17036-205-02

MATERIAL:
SURFACE:
LINEAR TOLERANCE: - mm
ANGULAR TOLERANCE: - deg
WEIGHT: g
SCALE: 1:20 UNIT: mm FORMAT: A3
AUTOR: C.Dormegnie CHECKER: C.Dormegnie
STATUS: APPROVED
DATE: 29/01/2019

DO NOT SCALE DRAWING
SHEET 1 OF 1
TITLE:
ADEO-17036-201-04-06 A
DESCRIPTION:
MIRROR DOOR - COLUMN

This drawing is the exclusive property of **ADEO**.
Any reproduction in part or whole without the written permition of **ADEO** is prohibited.

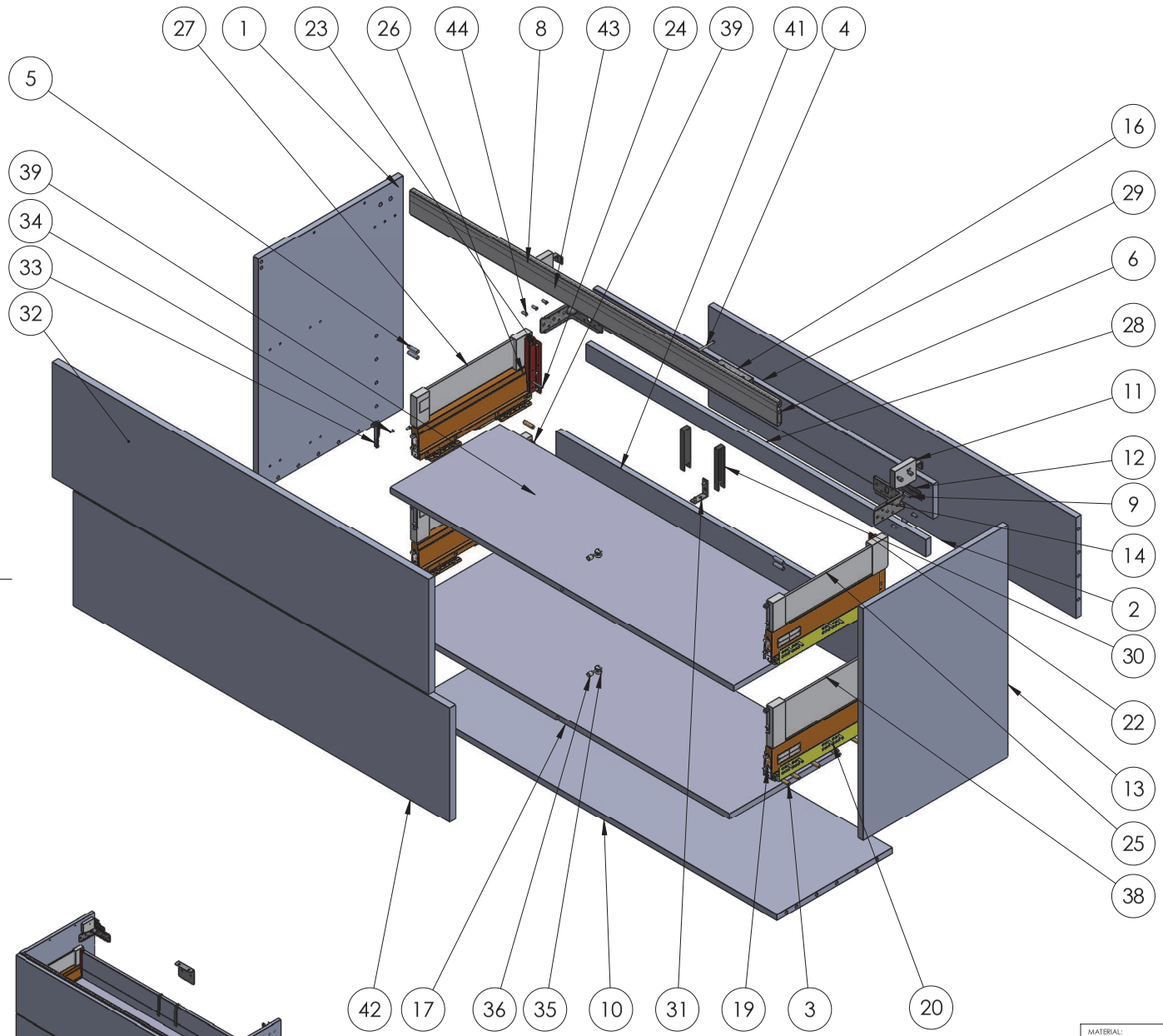

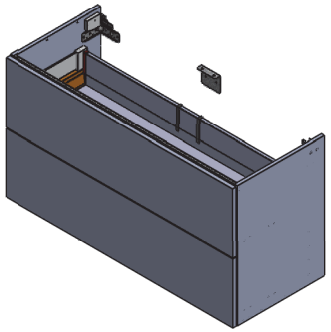

No. ARTICLE	NUMERO DE PIECE	configuration	QTE
1	ADEO-17036-102-01 SIDE LINE LEFT	640 2 DRAWERS	1
2	ADEO-17036-104 Back Panel LINE	1200	1
3	Wood Dowel 8x30	Défaut	13
4	Screw 4x50	Screw for fixing bottom and back panel	1
5	Dowel for aluminum profil	8 x 30 mm	4
6	Aluminium Profil 65x14 KREA/ARCOM 8920720	1168	1
7	Wood Dowel 8x30	8 x 30 mm	7
8	Hanger adjustable left NEO	Friulana Accessori (204131001)	1
9	Screw 3x25	Security for hanger	2
10	ADEO-17036-103 Bottom LINE	1200	1
11	Hanger adjustable right NEO	Friulana Accessori (204121001)	1
12	STEEL RAIL Right	Italiana Ferramenta 635100020ZN (Right)	1
13	ADEO-17036-102 SIDE LINE RIGHT	640 2 DRAWERS	1
14	ADEO-17036-301 METAL CONSOLE 100x100x40x1.8	EURO ORVEL 156 Z	2
15	EURO SCREW	Euro screw for metal console	2
16	ADEO-17036-301 METAL CONSOLE 82x30x100x1.5	EURO ORVEL	1
17	ADEO-17036-300 DRAWER Bottom	350 x 1200	2
18	HETTICH Slide QV6 PSL 350 Left	HETTICH Slide QV6 PSL 350 Left	2
19	HETTICH Front fixing	HETTICH Front fixing	4
20	Screw 6,3 x 13 (Euroscrew)	Euroscrew for fixing slide Hettich	16
21	HETTICH Slide QV6 PSL 350 Right	HETTICH Slide QV6 PSL 350 Right	2
22	Corner Connector H144 Right	HETTICH	1
23	Screw 3.5x13	For back panel drawer and corner	12
24	Screw 3.5 x 35	For back panel drawer and corner	4
25	Design Side Right	350 144 Right	1
26	Corner Connector H144 Left	HETTICH	1
27	Design Side Left	350 144 Left	1
28	ADEO-17036-300 DRAWER Back Panel	1200 x 144	1
29	ADEO-17036-300 DRAWER upper back panel	Drawer upper back Panel 1080 (1200)	1
30	ADEO-17036 Cutout coverR	Cutout cover (ARCOM)	2
31	ADEO-17036-301 METAL SQUARE	ADEO-17036-301 METAL SQUARE (Burgbad)	2
32	ADEO-17036-106-03 Drawer Face LINE	PSL 1200 316 H144	1
33	Front attachment for design side	HETTICH	4
34	Screw 3,5 x 12	For front attachment	8
35	Eccentric for Drawer face NEO	Défaut	2
36	Ball for eccentric for Drawer face NEO	GRASS F148026744223	2
37	Corner Connector H176 Right	HETTICH	1
38	Design Side Right	350 176 Right	1
39	Corner Connector H176 Left	HETTICH	1
40	Design Side Left	350 176 Left	1
41	ADEO-17036-300 DRAWER Back Panel	1200 x 174	1
42	ADEO-17036-106-03 Drawer Face LINE	PSL 1200 316 H176	1
43	Steel rail 60 mm (for hanger)	LEFT	1
44	Screw DIN 7049 5.5x13	Défaut	4

Drawer specification (ADEO-17036-300)

640 x 480 x 900
-aluminium profil 32.5x14

TOP : ADEO-17036-105

MATERIAL:		DO NOT SCALE DRAWING	SHEET 1 OF 1
SURFACE:		TITLE: ADEO-17036-101-04-04	A
LINEAR TOLERANCE: - mm ANGULAR TOLERANCE: - deg			
WEIGHT: g		DESCRIPTION: 640 x 480 x 1200 PSL	
SCALE: 1:10	UNIT: mm / FORMAT: A3		
AUTOR: C.Dormegnie	CHECKER: JC.Devillers		
STATUS:	APPROVED		
DATE: 29/01/2019			

This drawing is the exclusive property of **ADEO**.
Any reproduction in part or whole without the written permition of **ADEO** is prohibited.

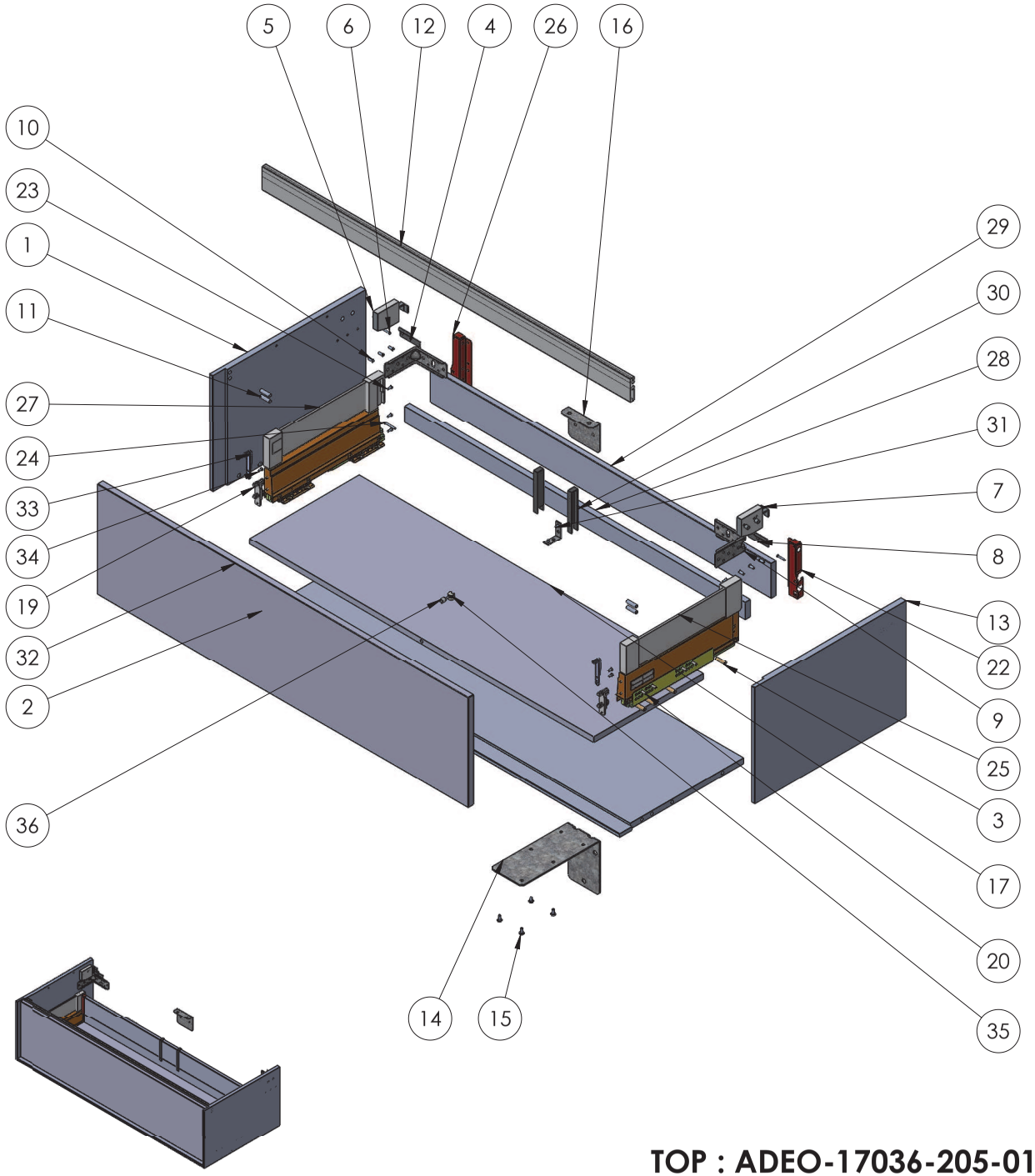

No. ARTICLE	NUMERO DE PIECE	configuration	QTE
1	ADEO17036-202-01 Side FRAME Left	SIDE DRAWER	1
2	ADEO-17036-203-01 Bottom FRAME	1200	1
3	Wood Dowel 8x30	Défaut	8
4	STEEL RAIL Left	Italiana Ferramenta 63510020ZN (Left)	1
5	Hanger adjustable left NEO	Friulana Accessori (204131001)	1
6	Screw 3x25	Security for hanger	2
7	Hanger adjustable right NEO	Friulana Accessori (204121001)	1
8	STEEL RAIL Right	Italiana Ferramenta 63510020ZN (Right)	1
9	ADEO-17036-301 METAL CONSOLE 100x100x40x1.8	EURO ORVEL 156 Z	2
10	EURO SCREW	Euro screw for metal console	6
11	Dowel for aluminum profil	8 x 30 mm	4
12	Aluminium Profil 65x14 KREA/ARCOM 8920720	1168	1
13	ADEO17036-202-01 SIDE FRAME RIGHT	SIDE DRAWER	1
14	ADEO-17036-301 METAL CONSOLE 250x150x100x3	MERCIER (SEPCONSOLE2)	1
15	Screw DIN 7049 5.5x13	For metal console 250x150x100x3	4
16	ADEO-17036-301 METAL CONSOLE 82x30x100x1.5	EURO ORVEL	1
17	ADEO-17036-300 DRAWER Bottom	350 x 1200	1
18	HETTICH Slide QV6 PSL 350 Left	HETTICH Slide QV6 PSL 350 Left	1
19	HETTICH Front fixing	HETTICH Front fixing	2
20	Screw 6,3 x 13 (Euroscrew)	Euroscrew for fixing slide Hettich	8
21	HETTICH Slide QV6 PSL 350 Right	HETTICH Slide QV6 PSL 350 Right	1
22	Corner Connector H144 Right	HETTICH	1
23	Screw 3.5x13	For back panel drawer and corner	8
24	Screw 3.5 x 35	For back panel drawer and corner	2
25	Design Side Right	350 144 Right	1
26	Corner Connector H144 Left	HETTICH	1
27	Design Side Left	350 144 Left	1
28	ADEO-17036-300 DRAWER Back Panel	1200 x 144	1
29	ADEO-17036-300 DRAWER upper back panel	Drawer upper back Panel 1080 (1200)	1
30	ADEO-17036 Cutout coverR	Cutout cover (ARCOM)	2
31	ADEO-17036-301 METAL SQUARE	ADEO-17036-301 METAL SQUARE (Burgbad)	1
32	ADEO-17036-206-03 Drawer Face FRAME	PSL 1200	1
33	Front attachment for design side	HETTICH	2
34	Screw 3.5 x 12	For front attachment	4
35	Eccentric for Drawer face NEO	Défaut	1
36	Ball for eccentric for Drawer face NEO	GRASS F148026744223	1

Drawer specification (ADEO-17036-300)

320 x 480 x 900
-aluminium profil 32.5x14

TOP : ADEO-17036-205-01

MATERIAL:		DO NOT SCALE DRAWING	SHEET 1 OF 1
SURFACE:		TITLE: ADEO-17036-201-01-04	A
LINEAR TOLERANCE: - mm ANGULAR TOLERANCE: - deg			
WEIGHT: g		DESCRIPTION: 320 x 480 x 1200 PSL	
SCALE: 1:10	UNIT: mm / FORMAT: A3		
AUTOR: C.Dormegnie	CHECKER: C.Dormegnie		
STATUS:	APPROVED		
DATE: 29/01/2019			

This drawing is the exclusive property of **ADEO**.
Any reproduction in part or whole without the written permition of **ADEO** is prohibited.

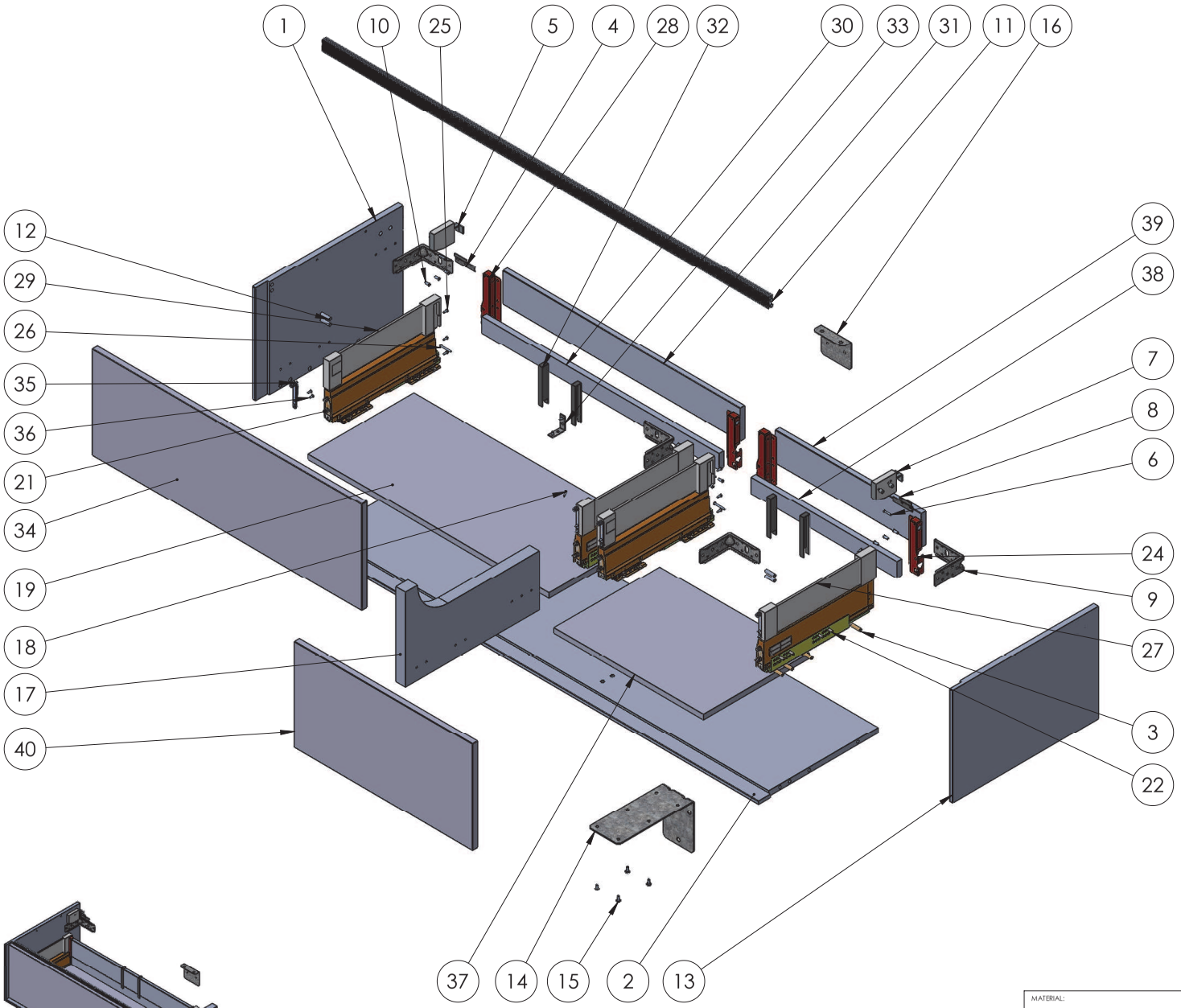

No. ARTICLE	NUMERO DE PIECE	configuration	QTE
1	ADEO17036-202-01 Side FRAME Left	SIDE DRAWER	1
2	ADEO-17036-203-01 Bottom FRAME	1500 900-600	1
3	Wood Dowel 8x30	Défaut	12
4	STEEL RAIL Left	Italiana Ferramenta 63510020ZN (Left)	1
5	Hanger adjustable left NEO	Friulana Accessori (204131001)	1
6	Screw 3x25	Security for hanger	2
7	Hanger adjustable right NEO	Friulana Accessori (204121001)	1
8	STEEL RAIL Right	Italiana Ferramenta 63510020ZN (Right)	1
9	ADEO-17036-301 METAL CONSOLE 100x100x40x1.8	EURO ORVEL 156 Z	4
10	EURO SCREW	Euro screw for metal console	12
11	Aluminium Profil 32x14 KREA/ARCOM 8920700	1468 mm	1
12	Dowel for aluminum profil	8 x 30 mm	4
13	ADEO17036-202-01 SIDE FRAME RIGHT	SIDE DRAWER	1
14	ADEO-17036-301 METAL CONSOLE 250x150x100x3	MERCIER (SEPCONSOLE2)	1
15	Screw DIN 7049 5.5x13	For metal console 250x150x100x3	4
16	ADEO-17036-301 METAL CONSOLE 82x30x100x1.5	EURO ORVEL	1
17	ADEO-17036-208 Middle Panel FRAME NEO	DRAWER DRAWER	1
18	Screw	For fixing aluminium profil and middle panel	1
19	ADEO-17036-300 DRAWER Bottom	350 x 900	1
20	HETTICH Slide QV6 PSL 350 Left	HETTICH Slide QV6 PSL 350 Left	2
21	HETTICH Front fixing	HETTICH Front fixing	4
22	Screw 6,3 x 13 (Euroscrew)	Euroscrew for fixing slide Hettich	16
23	HETTICH Slide QV6 PSL 350 Right	HETTICH Slide QV6 PSL 350 Right	2
24	Corner Connector H144 Right	HETTICH	2
25	Screw 3.5x13	For back panel drawer and corner	14
26	Screw 3.5 x 35	For back panel drawer and corner	4
27	Design Side Right	350 144 Right	2
28	Corner Connector H144 Left	HETTICH	2
29	Design Side Left	350 144 Left	2
30	ADEO-17036-300 DRAWER Back Panel	900 x 144	1
31	ADEO-17036-300 DRAWER upper back panel	Drawer upper back Panel 780 (900)	1
32	ADEO-17036 Cutout coverR	Cutout cover (ARCOM)	4
33	ADEO-17036-301 METAL SQUARE	ADEO-17036-301 METAL SQUARE (Burgbad)	1
34	ADEO-17036-206-03 Drawer Face FRAME	PSL 900 LEFT	1
35	Front attachment for design side	HETTICH	4
36	Screw 3.5 x 12	For front attachment	8
37	ADEO-17036-300 DRAWER Bottom	350 x 600	1
38	ADEO-17036-300 DRAWER Back Panel	600 x 144	1
39	ADEO-17036-300 DRAWER upper back panel	Drawer upper back Panel 480 (600)	1
40	ADEO-17036-206-03 Drawer Face FRAME	PSL 600 RIGHT	1

Drawer specification (ADEO-17036-300)

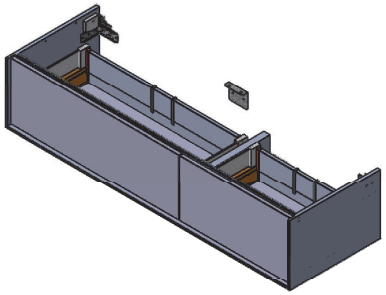

TOP : ADEO-17036-205-01

MATERIAL:		DO NOT SCALE DRAWING	SHEET 1 OF 1
SURFACE:		TITLE: ADEO-17036-201-03-02	A
LINEAR TOLERANCE: - mm ANGULAR TOLERANCE: - deg			
WEIGHT: g		DESCRIPTION: 320 x 480 x 1500 PSL	
SCALE: 1:10	UNIT: mm / FORMAT: A3		
AUTOR: C.Dormegnie	CHECKER: C.Dormegnie		
STATUS:	APPROVED		
DATE: 29/01/2019			

This drawing is the exclusive property of **ADEO**.
Any reproduction in part or whole without the written permition of **ADEO** is prohibited.

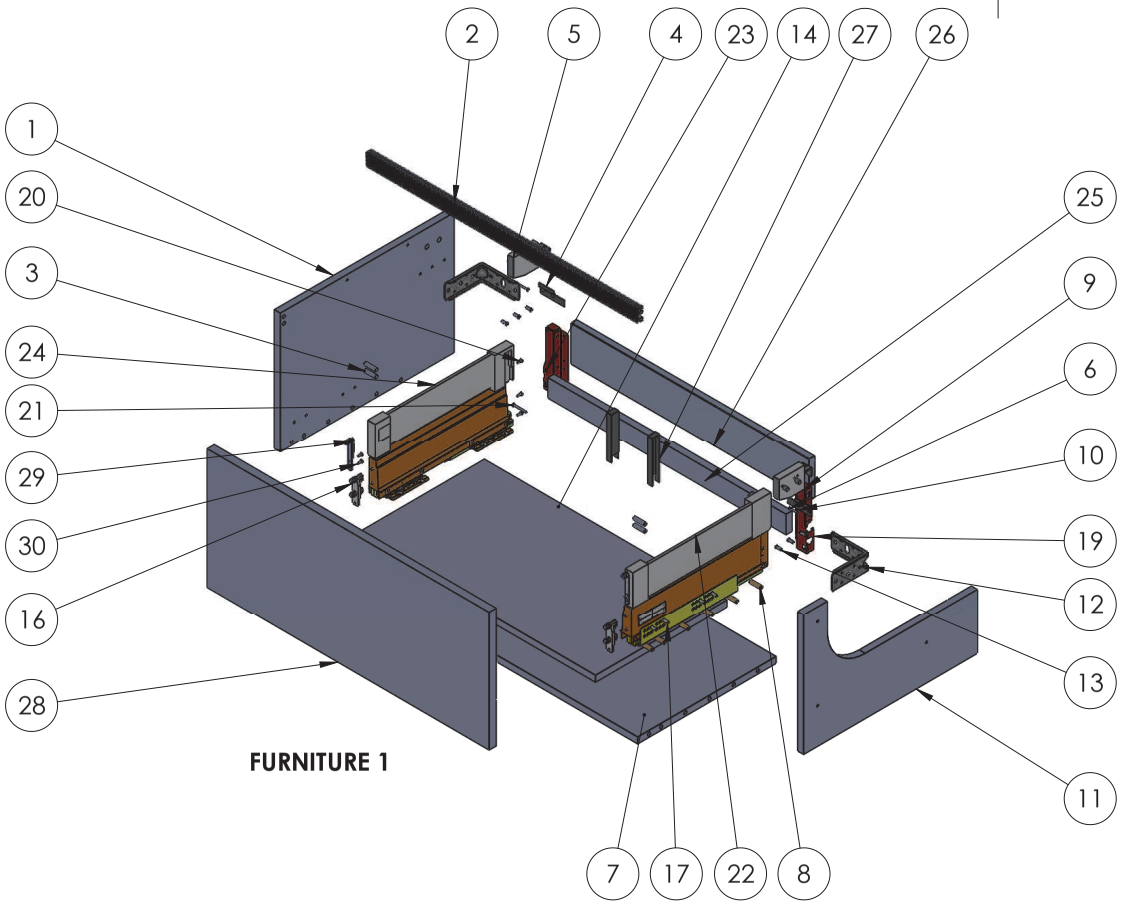

FURNITURE 1

No. ARTICLE	NUMERO DE PIECE	configuration	QTE
1	ADEO-17036-102-01 SIDE LINE LEFT	320 DRAWER	1
2	Aluminium Profil 32x14 KREA/ARCOM 8920700	718 mm	1
3	Dowel for aluminum profil	8 x 30 mm	4
4	STEEL RAIL Left	Italiana Ferramenta 63510020ZN (Left)	1
5	Hanger adjustable left NEO	Friulana Accessori (204131001)	1
6	Screw 3x25	Security for hanger	2
7	ADEO-17036-103 Bottom LINE	750	1
8	Wood Dowel 8x30	Défaut	12
9	Hanger adjustable right NEO	Friulana Accessori (204121001)	1
10	STEEL RAIL Right	Italiana Ferramenta 63510020ZN (Right)	1
11	ADEO-17036-102 SIDE LINE RIGHT	320 DRAWER BLOCK	1
12	ADEO-17036-301 METAL CONSOLE 100x100x40x1.8	EURO ORVEL 156 Z	2
13	EURO SCREW	Euro screw for metal console	6
14	ADEO-17036-300 DRAWER Bottom	350 x 750	1
15	HETTICH Slide QV6 PSL 350 Left	HETTICH Slide QV6 PSL 350 Left	1
16	HETTICH Front fixing	HETTICH Front fixing	2
17	Screw 6,3 x 13 (Euroscrew)	Euroscrew for fixing slide Hettich	8
18	HETTICH Slide QV6 PSL 350 Right	HETTICH Slide QV6 PSL 350 Right	1
19	Corner Connector H144 Right	HETTICH	1
20	Screw 3.5x13	For back panel drawer and corner	6
21	Screw 3.5 x 35	For back panel drawer and corner	2
22	Design Side Right	350 144 Right	1
23	Corner Connector H144 Left	HETTICH	1
24	Design Side Left	350 144 Left	1
25	ADEO-17036-300 DRAWER Back Panel	750 x 144	1
26	ADEO-17036-300 DRAWER upper back panel	Drawer upper back Panel 630 (750)	1
27	ADEO-17036 Cutout coverR	Cutout cover (ARCOM)	2
28	ADEO-17036-106-03 Drawer Face LINE	PSL 750 316 H144	1
29	Front attachment for design side	HETTICH	2
30	Screw 3.5 x 12	For front attachment	4

Drawer specification (ADEO-17036-300)

FURNITURE 2 IS THE SYMMETRICAL FURNITURE 1

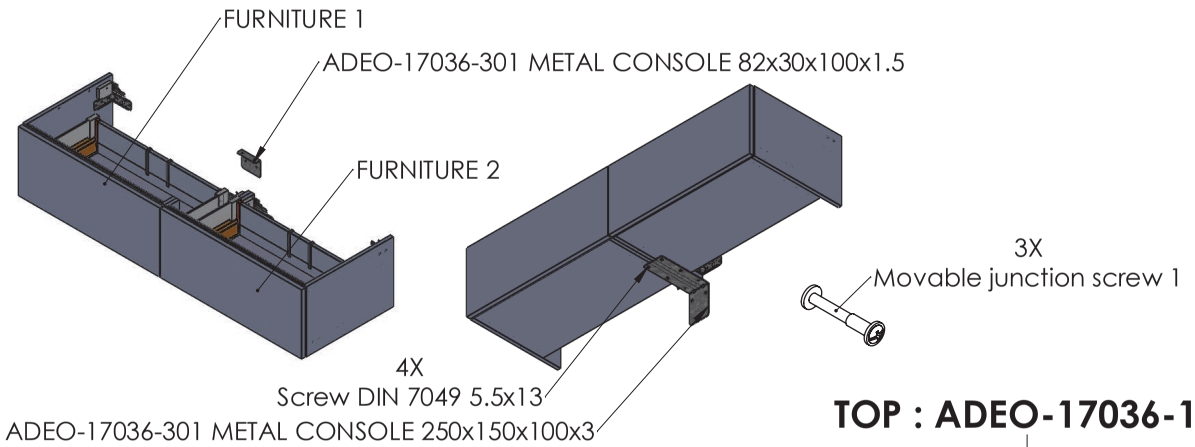

TOP : ADEO-17036-105

MATERIAL:		DO NOT SCALE DRAWING	SHEET 1 OF 1
SURFACE:		TITLE: ADEO-17036-101-12-04	A
LINEAR TOLERANCE: - mm ANGULAR TOLERANCE: - deg			
WEIGHT: g		DESCRIPTION: 320 x 480 x 1500 PSL	
SCALE: 1:10	UNIT: mm / FORMAT: A3		
AUTOR: C.Dormegnie	CHECKER: JC.Devillers		
STATUS:	APPROVED		
DATE: 29/01/2019			

This drawing is the exclusive property of **ADEO**.
Any reproduction in part or whole without the written permition of **ADEO** is prohibited.

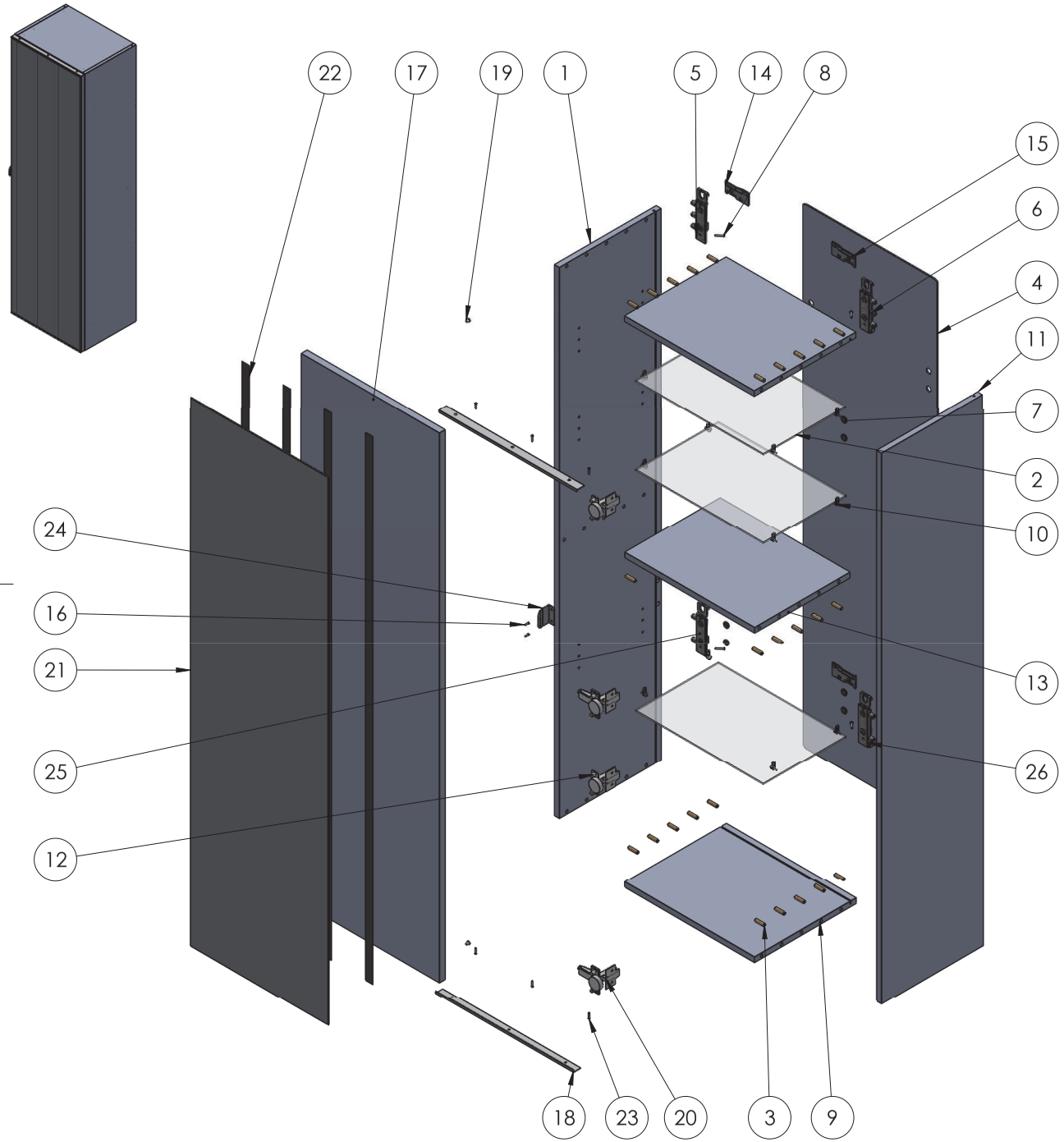

No. ARTICLE	NUMERO DE PIECE	configuration	QTE
1	ADEO-17036-102-04 SIDE COLUMN LINE LEFT	1540 x 350 (450)	1
2	Glass 413 x 268	Glass 413 x 268	3
3	Wood Dowel 8x30	Défaut	30
4	ADEO-17036-104 Back Panel Column LINE	1540 x 450	1
5	HANGER SH6401 Left	GRASS with anti-uprising (VAUTH-SAGE NR.F155147941223)	1
6	HANGER SH6401 Right	GRASS with anti-uprising (VAUTH-SAGE NR.F155147942223)	1
7	Hanger Cover	Hanger Cover	8
8	Screw 3.5x20	FOR HANGER	4
9	ADEO-17036-105 Top Column LINE	450 P350	2
10	Cleat for glass schelve	POLIPLAST 196	12
11	ADEO-17036-102-04 SIDE COLUMN LINE RIGHT	1540 x 350 Door (450)	1
12	Hinge GRASS	Nexis GRASS F015072815 236	2
13	ADEO-17036-107 Intercalary 450 P350	Intercalary 450 x P350	1
14	Steel_rail_column_DT	Ferramenta Perin	2
15	Steel_rail_column_GH	Ferramenta Perin	2
16	Screw 2.9x13	FOR HANDLE or FOR EJECTOR	2
17	ADEO-17036-106-02 Door Column LINE	Door 1536 x 446 RIGHT	1
18	Mirror metal profil	445mm	2
19	Door buffer	For door and Face drawer	2
20	Hinge GRASS	Nexis with Softclose GRASS F015072815 236	2
21	ADEO-17036-308 Mirror LINE	1533 x 445	1
22	Tape 24mm	TAPE 24mm Length 1530	4
23	Screw 3x16	For mirror metal profil	6
24	ADEO-17036-303 Handle 50 Line NEO	50mm	1
25	HANGER SH6303 Left	GRASS without anti-uprising (VAUTH-SAGE NR.F155147309223)	1
26	HANGER SH6303 Right	GRASS without anti-uprising (VAUTH-SAGE NR.F155147310223)	1

MATERIAL:
SURFACE:
LINEAR TOLERANCE: - mm
ANGULAR TOLERANCE: - deg
WEIGHT: g
SCALE: 1:10 | UNIT: mm | FORMAT: A3
AUTOR: C.Dormegnie | CHECKER: C.Dormegnie
STATUS: APPROVED
DATE: 29/01/2019

DO NOT SCALE DRAWING
SHEET 1 OF 1

TITLE:
ADEO-17036-101-15-02 A

DESCRIPTION:
COLUMN MIRROR DOOR 450

This drawing is the exclusive property of **ADEO**.
Any reproduction in part or whole without the written permition of **ADEO** is prohibited.

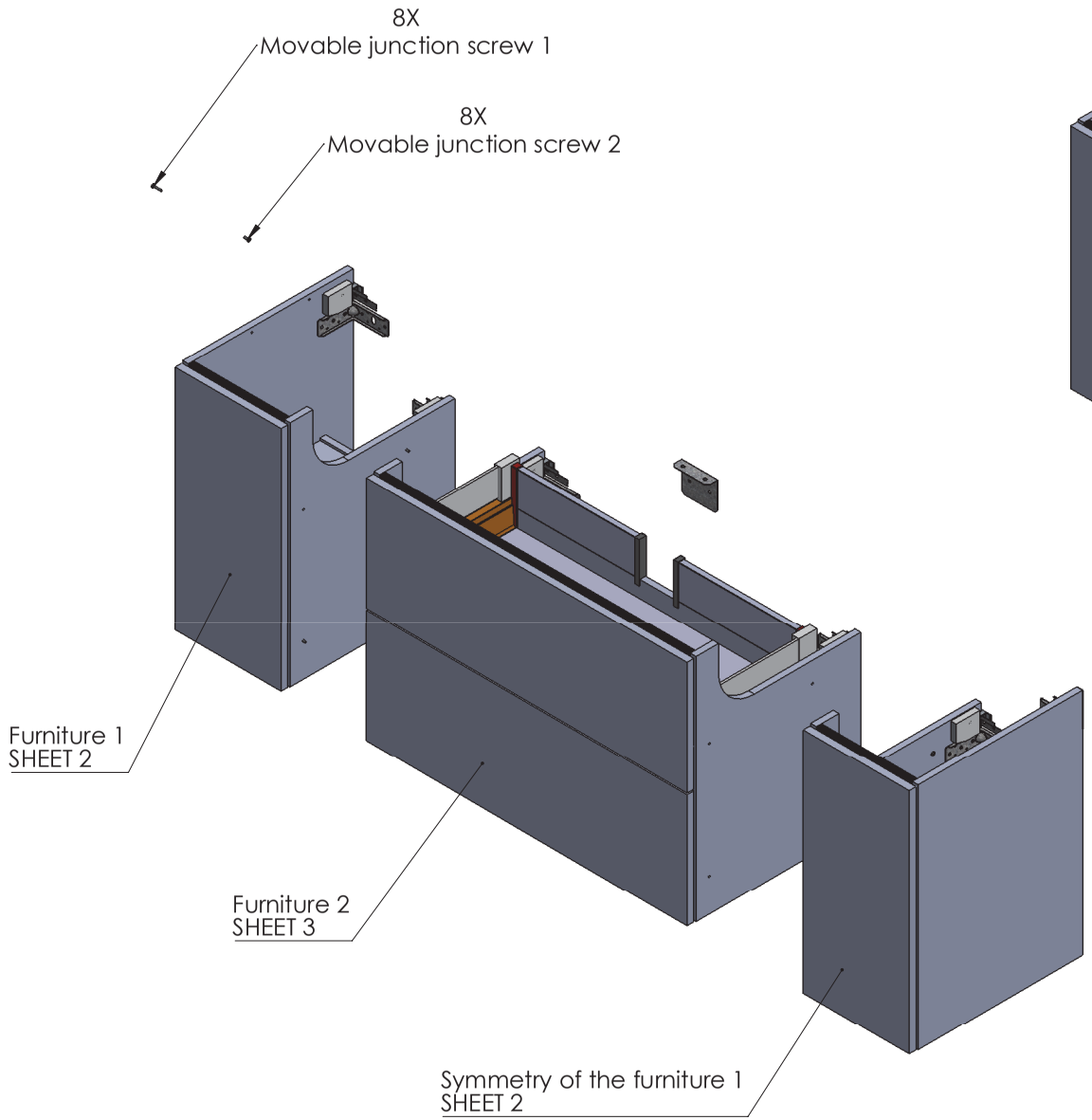

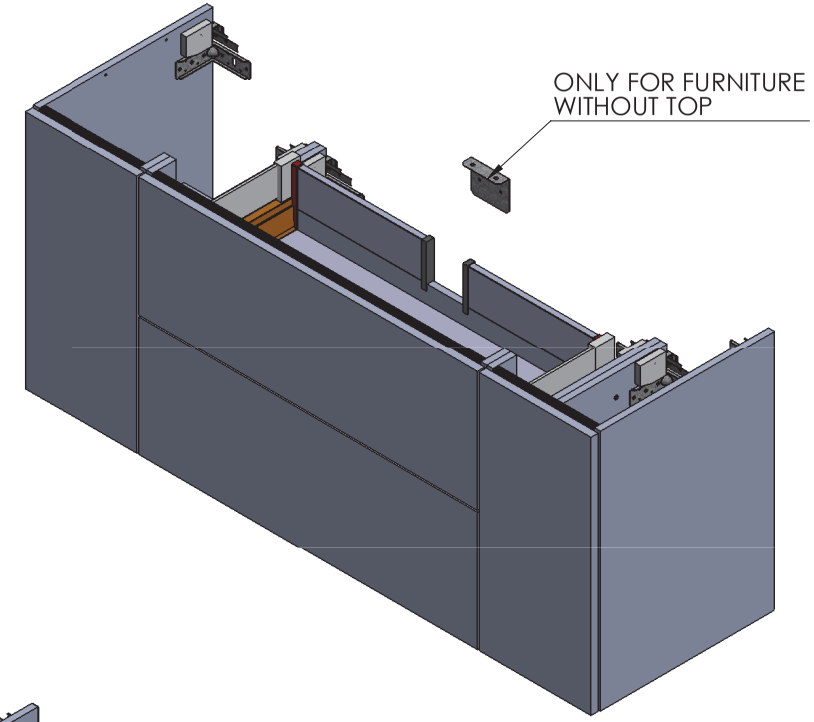

TOP : ADEO-17036-105

MATERIAL:		DO NOT SCALE DRAWING	SHEET 1 OF 3
SURFACE:		TITLE: ADEO-17036-101-09-04	A
LINEAR TOLERANCE: - mm ANGULAR TOLERANCE: - deg			
WEIGHT: g		DESCRIPTION: 640 x 480 x 1500 PSL	
SCALE: 1:10	UNIT: mm / FORMAT: A3		
AUTOR: C.Dormegnie	CHECKER: JC.Devillers		
STATUS:	APPROVED		
DATE: 29/01/2019			

This drawing is the exclusive property of **ADEO**.
Any reproduction in part or whole without the written permition of **ADEO** is prohibited.

No. ARTICLE	NUMERO DE PIECE	configuration	QTE
1	ADEO-17036-102-01 SIDE LINE LEFT	640 DOOR	1
2	ADEO-17036-104 Back Panel LINE	300	1
3	Wood Dowel 8x30	Défaut	20
4	Cleat	FERRAMENTA LIVENZA 10208080	4
5	Aluminium Profil 32x14 KREA/ARCOM 8920700	268 mm	1
6	Dowel for aluminum profil	8 x 30 mm	4
7	STEEL RAIL Left	Italiana Ferramenta 63510020ZN (Left)	1
8	Hanger adjustable left NEO	Friulana Accessori (204131001)	1
9	Screw 3x25	Security for hanger	2
10	300	300	1
11	Hanger adjustable right NEO	Friulana Accessori (204121001)	1
12	STEEL RAIL Right	Italiana Ferramenta 63510020ZN (Right)	1
13	ADEO-17036-102 SIDE LINE RIGHT	PSL 640 BLOCK	1
14	ADEO-17036-301 METAL CONSOLE 100x100x40x1.8	EURO ORVEL 156 Z	2
15	EURO SCREW	Euro screw for metal console	6
16	Ejector LINE	K PUSH Italiana ferramenta	1
17	Screw 2.9x13	FOR HANDLE or FOR EJECTOR	2
18	ADEO-17036-106-01 Door LINE	640 300 PSL	1
19	Hinge GRASS	Nexis without spring (PSL) GRASS F015135474 236	2
20	ADEO-17036-107 Shelve	300	1

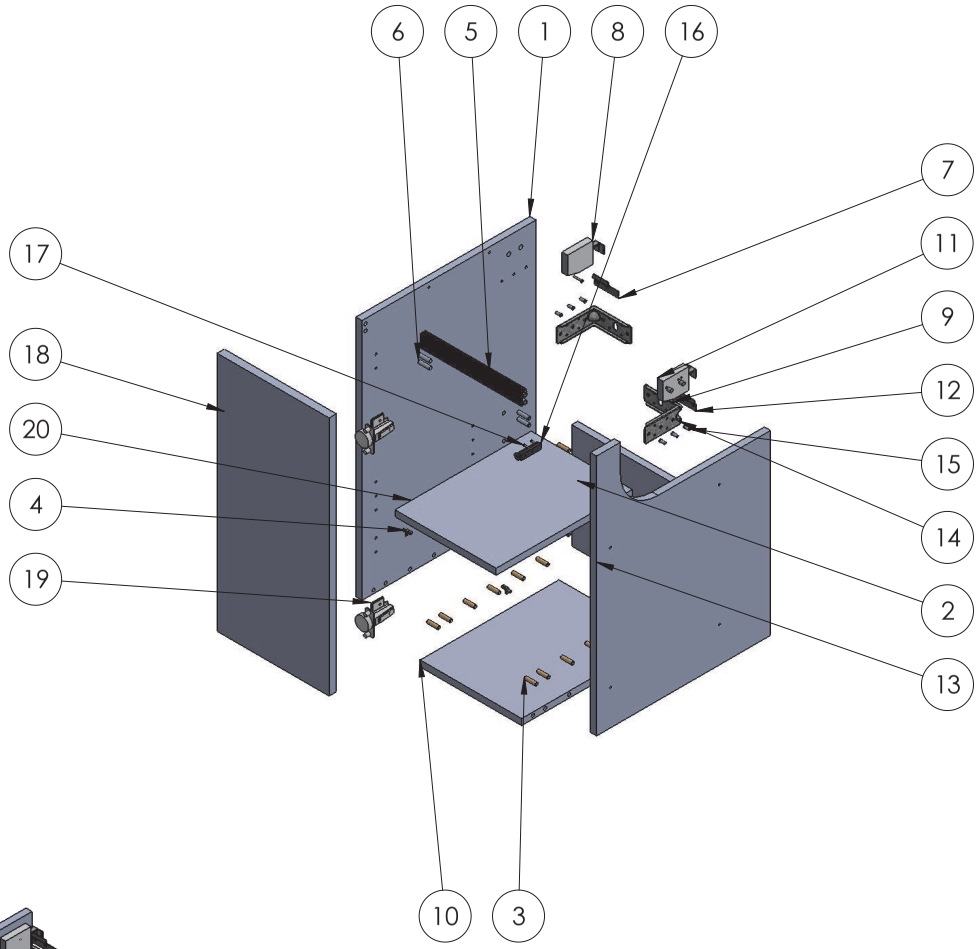

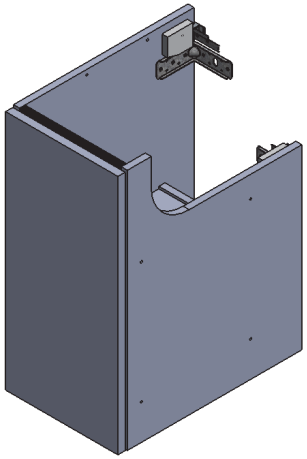

TOP : ADEO-17036-105

MATERIAL:		DO NOT SCALE DRAWING	SHEET 2 OF 3
SURFACE:		TITLE: ADEO-17036-101-09-04	A
LINEAR TOLERANCE: - mm ANGULAR TOLERANCE: - deg			
WEIGHT: g		DESCRIPTION: Furniture 1	
SCALE: 1:10	UNIT: mm / FORMAT: A3		
AUTOR: C.Dormegnie	CHECKER: JC.Devillers		
STATUS:	APPROVED		
DATE: 29/01/2019			

This drawing is the exclusive property of **ADEO**.
Any reproduction in part or whole without the written permition of **ADEO** is prohibited.

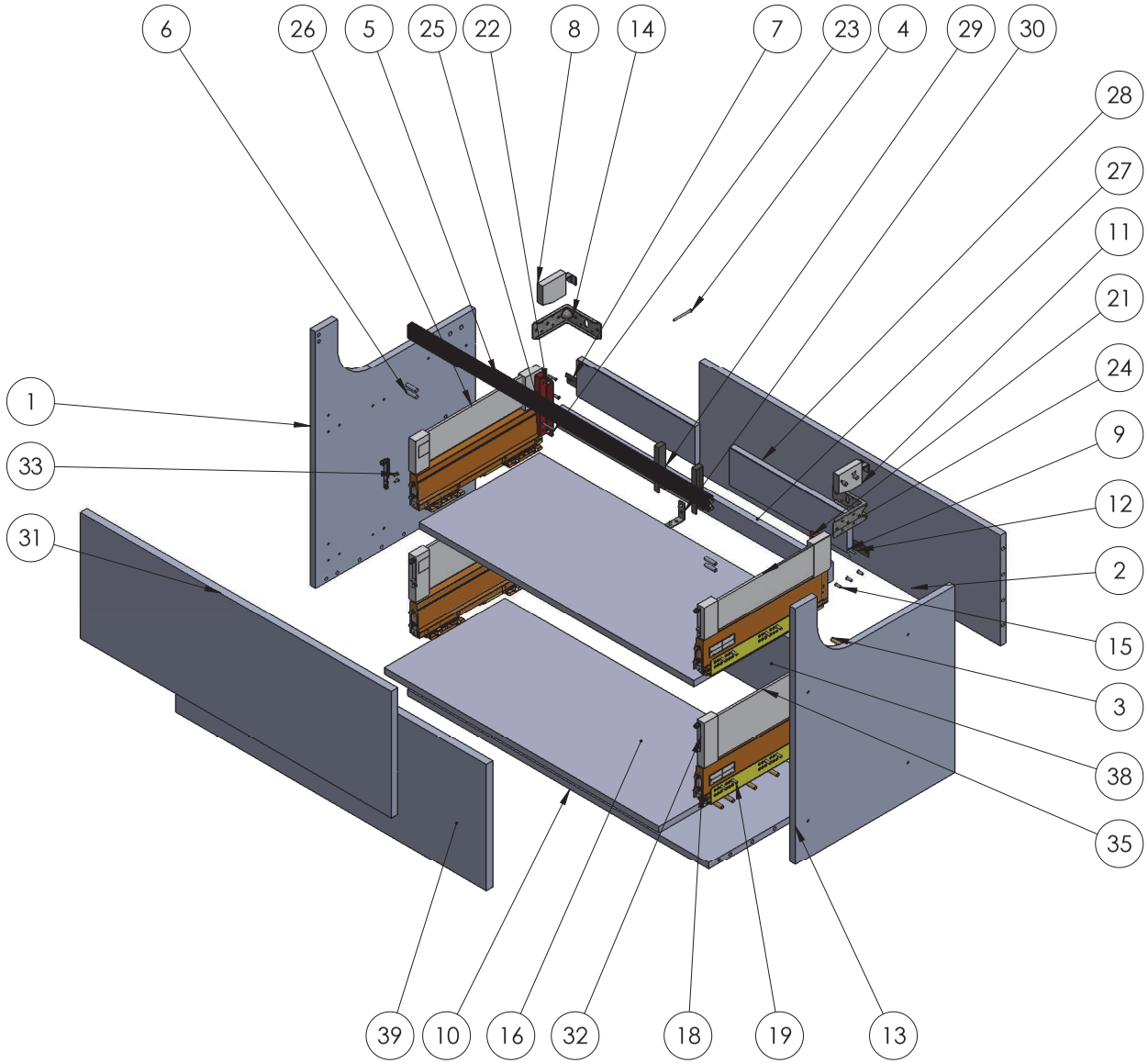

No. ARTICLE	NUMERO DE PIECE	configuration	QTE
1	ADEO-17036-102-01 SIDE LINE LEFT	640 2 DRAWERS BLOCK	1
2	ADEO-17036-104 Back Panel LINE	900	1
3	Wood Dowel 8x30	Défaut	20
4	Screw 4x50	Screw for fixing bottom and back panel	1
5	Aluminium Profil 32x14 KREA/ARCOM 8920700	868 mm	1
6	Dowel for aluminum profil	8 x 30 mm	4
7	STEEL RAIL Left	Italiana Ferramenta 635100202N (Left)	1
8	Hanger adjustable left NEO	Friulana Accessori (204131001)	1
9	Screw 3x25	Security for hanger	2
10	ADEO-17036-103 Bottom LINE	900	1
11	Hanger adjustable right NEO	Friulana Accessori (204121001)	1
12	STEEL RAIL Right	Italiana Ferramenta 635100202N (Right)	1
13	ADEO-17036-102 SIDE LINE RIGHT	640 2 DRAWERS BLOCK	1
14	ADEO-17036-301 METAL CONSOLE 100x100x40x1.8	EURO ORVEL 156 Z	2
15	EURO SCREW	Euro screw for metal console	6
16	ADEO-17036-300 DRAWER Bottom	350 x 900	2
17	HETTICH Slide QV6 PSL 350 Left	HETTICH Slide QV6 PSL 350 Left	2
18	HETTICH Front fixing	HETTICH Front fixing	4
19	Screw 6,3 x 13 (Euroscrew)	Euroscrew for fixing slide Hettich	16
20	HETTICH Slide QV6 PSL 350 Right	HETTICH Slide QV6 PSL 350 Right	2
21	Corner Connector H144 Right	HETTICH	1
22	Screw 3.5x13	For back panel drawer and corner	12
23	Screw 3.5 x 35	For back panel drawer and corner	4
24	Design Side Right	350 144 Right	1
25	Corner Connector H144 Left	HETTICH	1
26	Design Side Left	350 144 Left	1
27	ADEO-17036-300 DRAWER Back Panel	900 x 144	1
28	ADEO-17036-300 DRAWER upper back panel	Drawer upper back Panel 780 (900) WITH CUT MIDDLE 100mm	1
29	ADEO-17036 Cutout coverR	Cutout cover (ARCOM)	2
30	ADEO-17036-301 METAL SQUARE	ADEO-17036-301 METAL SQUARE (Burgbad)	2
31	ADEO-17036-106-03 Drawer Face LINE	PSL 900 316 H144	1
32	Front attachment for design side	HETTICH	4
33	Screw 3.5 x 12	For front attachment	8
34	Corner Connector H176 Right	HETTICH	1
35	Design Side Right	350 176 Right	1
36	Corner Connector H176 Left	HETTICH	1
37	Design Side Left	350 176 Left	1
38	ADEO-17036-300 DRAWER Back Panel	900 x 174	1
39	ADEO-17036-106-03 Drawer Face LINE	PSL 900 316 H176	1

Drawer specification (ADEO-17036-300)

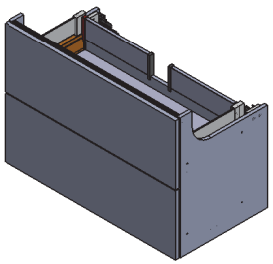

TOP : ADEO-17036-105

MATERIAL:		DO NOT SCALE DRAWING	SHEET 3 OF 3
SURFACE:		TITLE: ADEO-17036-101-09-04	A
LINEAR TOLERANCE: - mm ANGULAR TOLERANCE: - deg			
WEIGHT: g		DESCRIPTION: Furniture 2	
SCALE: 1:10	UNIT: mm / FORMAT: A3		
AUTOR: C.Dormegnie	CHECKER: JC.Devillers		
STATUS:	APPROVED		
DATE: 29/01/2019			

This drawing is the exclusive property of **ADEO**.
Any reproduction in part or whole without the written permition of **ADEO** is prohibited.

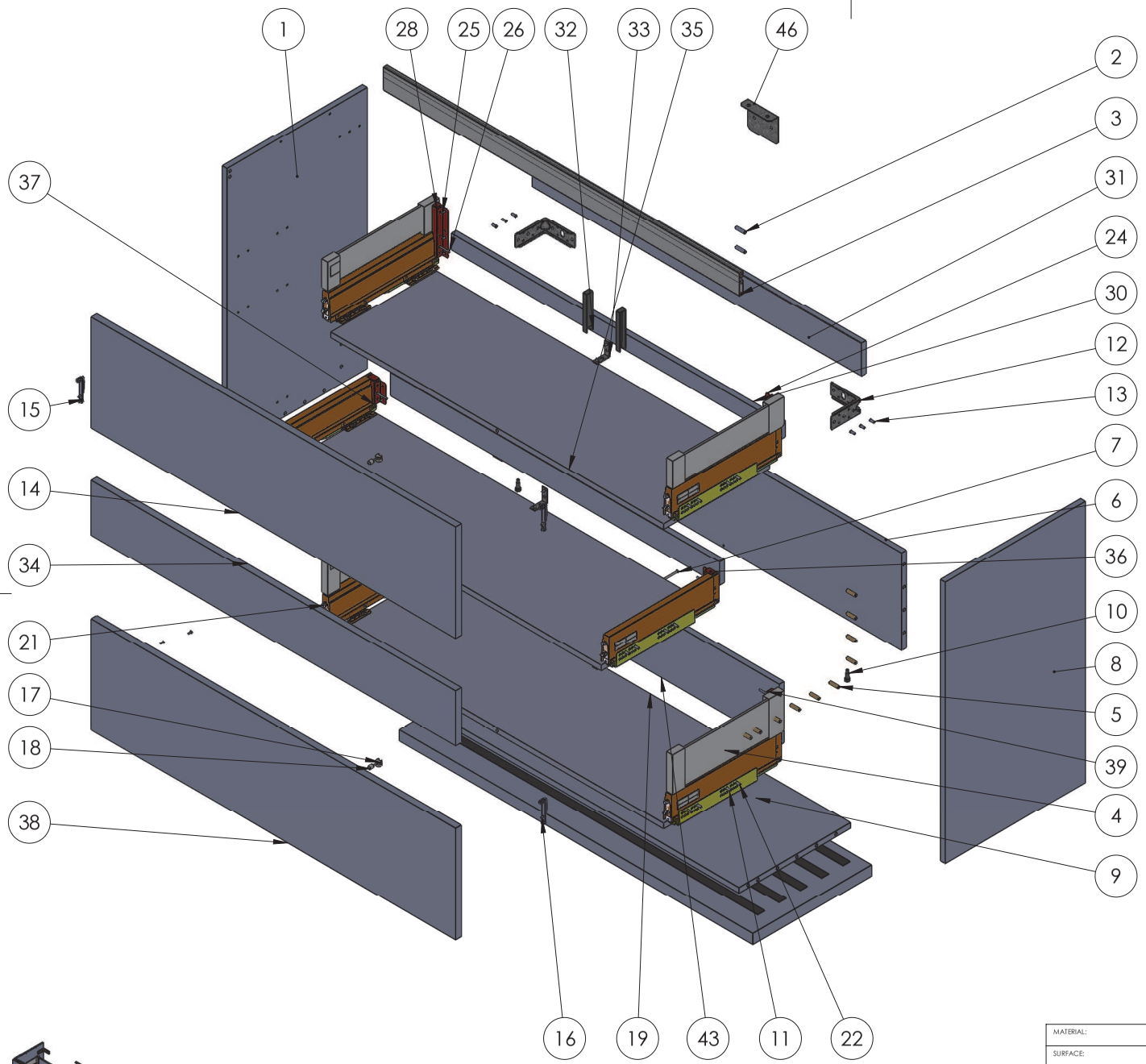

No. ARTICLE	NUMERO DE PIECE	configuration	QTE
1	ADEO-17036-102-01 SIDE LINE LEFT	840 3 DRAWERS	1
2	Dowel for aluminum profil	8 x 30 mm	4
3	Aluminium Profil 65x14 KREA/ARCOM 8920720	1168	1
4	ADEO-17036-103 Bottom LINE	1200	1
5	Wood Dowel 8x30	Défaut	12
6	ADEO-17036-104 Back Panel LINE	1200	1
7	Screw 4x50	Screw for fixing bottom and back panel	1
8	ADEO-17036-102 SIDE LINE RIGHT	840 3 DRAWERS	1
9	ADEO-17036-109 BASE	1200	1
10	Leg for socle LINE	300007438 (949894)	4
11	Tape 24mm	TAPE 24mm Length 1150	5
12	ADEO-17036-301 METAL CONSOLE 100x100x40x1.8	EURO ORVEL 156 Z	2
13	EURO SCREW	Euro screw for metal console	2
14	ADEO-17036-106-03 Drawer Face LINE	PSL 1200 316 H144	1
15	Front attachment for design side	HETTICH	4
16	Screw 3.5 x 12	For front attachment	8
17	Eccentric for Drawer face NEO	Défaut	3
18	Ball for eccentric for Drawer face NEO	GRASS F148026744223	3
19	ADEO-17036-300 DRAWER Bottom	350 x 1200	3
20	HETTICH Slide QV6 PSL 350 Left	HETTICH Slide QV6 PSL 350 Left	3
21	HETTICH Front fixing	HETTICH Front fixing	6
22	Screw 6,3 x 13 (Euroscrew)	Euroscrew for fixing slide Hettich	24
23	HETTICH Slide QV6 PSL 350 Right	HETTICH Slide QV6 PSL 350 Right	3
24	Corner Connector H144 Right	HETTICH	1
25	Screw 3.5x13	For back panel drawer and corner	16
26	Screw 3.5 x 35	For back panel drawer and corner	6
27	Design Side Right	350 144 Right	1
28	Corner Connector H144 Left	HETTICH	1
29	Design Side Left	350 144 Left	1
30	ADEO-17036-300 DRAWER Back Panel	1200 x 144	1
31	ADEO-17036-300 DRAWER upper back panel	Drawer upper back Panel 1080 (1200)	1
32	ADEO-17036 Cutout coverR	Cutout cover (ARCOM)	2
33	ADEO-17036-301 METAL SQUARE	ADEO-17036-301 METAL SQUARE (Burgbad)	3
34	ADEO-17036-106-03 Drawer Face LINE	PSL 1200 156 H70	1
35	ADEO-17036-300 DRAWER Back Panel	1200 x 70	1
36	Corner Connector H70 Right	HETTICH	1
37	Corner Connector H70 Left	HETTICH	1
38	ADEO-17036-106-03 Drawer Face LINE	PSL 1200 316 H176	1
39	Corner Connector H176 Right	HETTICH	1
40	Design Side Right	350 176 Right	1
41	Corner Connector H176 Left	HETTICH	1
42	Design Side Left	350 176 Left	1
43	ADEO-17036-300 DRAWER Back Panel	1200 x 174	1
44	Wood Dowel 8x30	8 x 30 mm	8
45	Screw DIN 7049 5.5x13	Défaut	4
46	ADEO-17036-301 METAL CONSOLE 82x30x100x1.5	EURO ORVEL	1

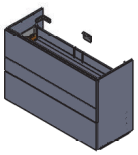

Drawer specification (ADEO-17036-300)

640 x 480 x 900
-aluminium profil 32.5x14

TOP : ADEO-17036-105

MATERIAL:
SURFACE:
LINEAR TOLERANCE: - mm
ANGULAR TOLERANCE: - deg
WEIGHT: g
SCALE: 1:10 UNIT: mm FORMAT: A3
AUTOR: C.Dormegnie CHECKER: JC.Devillers
STATUS: APPROVED
DATE: 29/01/2019

DO NOT SCALE DRAWING
SHEET 1 OF 1

TITLE:
ADEO-17036-101-10-04
A

DESCRIPTION:
840 x 480 x 1200 PSL

This drawing is the exclusive property of **ADEO**.
Any reproduction in part or whole without the written permition of **ADEO** is prohibited.

adeo

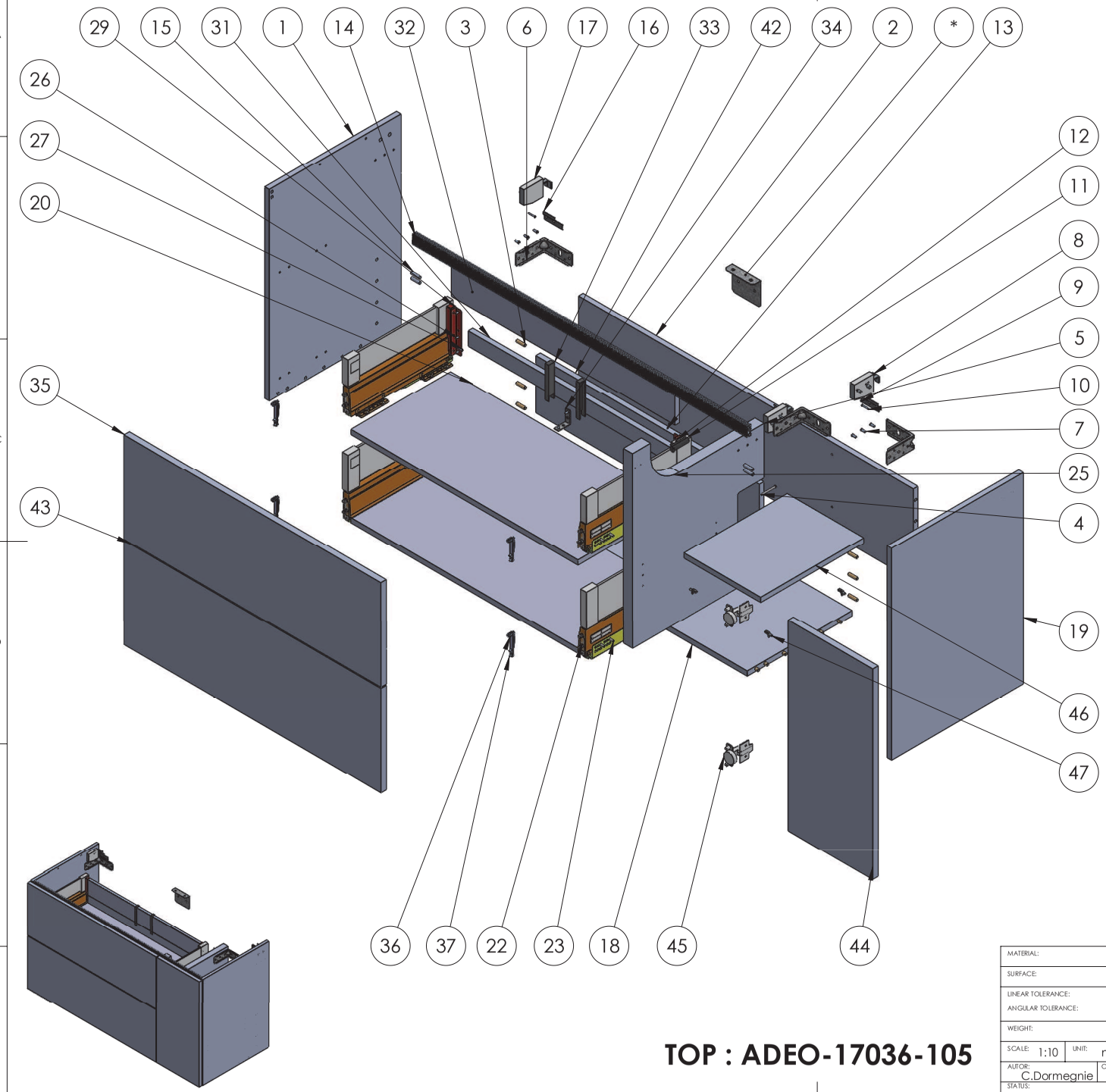

No. ARTICLE	NUMERO DE PIECE	configuration	QTE
1	ADEO-17036-102-01 SIDE LINE LEFT	640 2 DRAWERS	1
2	ADEO-17036-104 Back Panel LINE	1200 900-300	1
3	Wood Dowel 8x30	Défaut	22
4	Screw 4x50	Screw for fixing bottom and back panel	6
5	ADEO-17036-108 Middle Panel LINE NEO	2 DRAWERS - DOOR Push Lash	1
6	ADEO-17036-301 METAL CONSOLE 100x100x40x1.8	EURO ORVEL 156 Z	3
7	EURO SCREW	Euro screw for metal console	9
8	Hanger adjustable right NEO	Friulana Accessori (204121001)	2
9	STEEL RAIL Right	Italiana Ferramenta 63510020ZN (Right)	2
10	Screw 3x25	Security for hanger	3
11	Ejector LINE	K PUSH Italiana ferramenta	1
12	Screw 2.9x13	FOR HANDLE or FOR EJECTOR	2
13	Screw	For fixing aluminium profil and middle panel	1
14	Aluminium Profil 32x14 KREA/ARCOM 8920700	1168 mm	1
15	Dowel for aluminum profil	8 x 30 mm	4
16	STEEL RAIL Left	Italiana Ferramenta 63510020ZN (Left)	1
17	Hanger adjustable left NEO	Friulana Accessori (204131001)	1
18	ADEO-17036-103 Bottom LINE	1200 900-300	1
19	ADEO-17036-102 SIDE LINE RIGHT	640 DOOR	1
20	ADEO-17036-300 DRAWER Bottom	350 x 900	2
21	HETTICH Slide QV6 PSL 350 Left	HETTICH Slide QV6 PSL 350 Left	2
22	HETTICH Front fixing	HETTICH Front fixing	4
23	Screw 6,3 x 13 (Euroscrew)	Euroscrew for fixing slide Hettich	16
24	HETTICH Slide QV6 PSL 350 Right	HETTICH Slide QV6 PSL 350 Right	2
25	Corner Connector H144 Right	HETTICH	1
26	Screw 3.5x13	For back panel drawer and corner	12
27	Screw 3.5 x 35	For back panel drawer and corner	4
28	Design Side Right	350 144 Right	1
29	Corner Connector H144 Left	HETTICH	1
30	Design Side Left	350 144 Left	1
31	ADEO-17036-300 DRAWER Back Panel	900 x 144	1
32	ADEO-17036-300 DRAWER upper back panel	Drawer upper back Panel 780 (900)	1
33	ADEO-17036 Cutout coverR	Cutout cover (ARCOM)	2
34	ADEO-17036-301 METAL SQUARE	ADEO-17036-301 METAL SQUARE (Burgbad)	2
35	ADEO-17036-106-03 Drawer Face LINE	PSL 900 316 H144	1
36	Front attachment for design side	HETTICH	4
37	Screw 3.5 x 12	For front attachment	8
38	Corner Connector H176 Right	HETTICH	1
39	Design Side Right	350 176 Right	1
40	Corner Connector H176 Left	HETTICH	1
41	Design Side Left	350 176 Left	1
42	ADEO-17036-300 DRAWER Back Panel	900 x 174	1
43	ADEO-17036-106-03 Drawer Face LINE	PSL 900 316 H176	1
44	ADEO-17036-106-01 Door LINE	640 300 PSL	1
45	Hinge GRASS	Nexis without spring (PSL) GRASS F015135474 236	2
46	ADEO-17036-107 Shelve	300	1
47	Cleat	FERRAMENTA LIVENZA 10208080	4

TOP : ADEO-17036-105

MATERIAL:		DO NOT SCALE DRAWING	SHEET 1 OF 1
SURFACE:		TITLE: ADEO-17036-101-07-02	A
LINEAR TOLERANCE: - mm ANGULAR TOLERANCE: - deg			
WEIGHT: g		DESCRIPTION: 640 x 480 x 1200 PSL	
SCALE: 1:10	UNIT: mm	FORMAT: A3	
AUTOR: C.Dormegnie	CHECKER: C.Dormegnie		
STATUS:	APPROVED		
DATE: 29/01/2019			

This drawing is the exclusive property of **ADEO**.
Any reproduction in part or whole without the written permition of **ADEO** is prohibited.

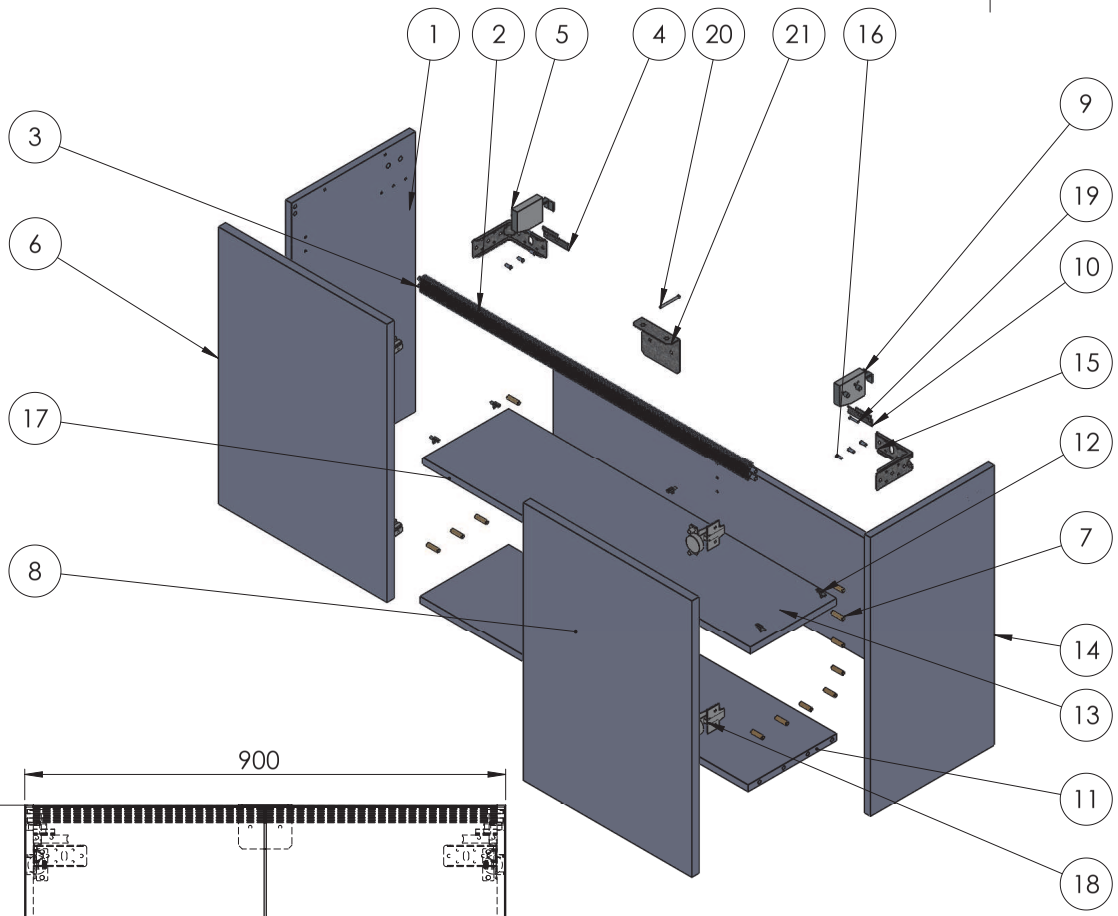

No. ARTICLE	NUMERO DE PIECE	configuration	QTE
1	ADEO-17036-102-01 SIDE LINE LEFT	640 (350) DOOR	1
2	Aluminium Profil 32x14 KREA/ARCOM 8920700	868 mm	1
3	Dowel for aluminum profil	8 x 30 mm	4
4	STEEL RAIL Left	Italiana Ferramenta 63510020ZN (Left)	1
5	Hanger adjustable left NEO	Friulana Accessori (204131001)	1
6	ADEO-17036-106-01 Door LINE	640 450 PSL	2
7	Wood Dowel 8x30	Défaut	16
8	Ejector inside LINE	Ø10 x 50mm	2
9	Hanger adjustable right NEO	Friulana Accessori (204121001)	1
10	STEEL RAIL Right	Italiana Ferramenta 63510020ZN (Right)	1
11	ADEO-17036-103 Bottom LINE	PSL 900 P350	1
12	Cleat	FERRAMENTA LIVENZA 10208080	5
13	ADEO-17036-104 Back Panel LINE	900 Shelve	1
14	ADEO-17036-102 SIDE LINE RIGHT	640 (350) DOOR	1
15	ADEO-17036-301 METAL CONSOLE 100x100x40x1.8	EURO ORVEL 156 Z	2
16	EURO SCREW	Euro screw for metal console	6
17	ADEO-17036-107 Shelve	900 (P350)	1
18	Hinge GRASS	Nexis without spring (PSL) GRASS F015135474 236	4
19	Screw 3x25	Security for hanger	2
20	Screw 4x50	Screw for fixing bottom and back panel	1
21	ADEO-17036-301 METAL CONSOLE 82x30x100x1.5	EURO ORVEL	1

640 x 350 x 600 PSL
- Only 4 Cleats
- Without metal console and screw 4x50

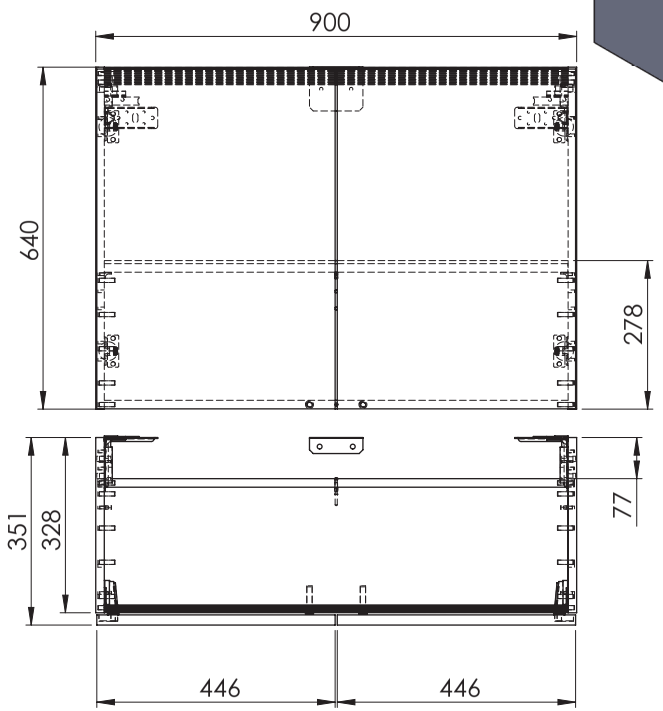

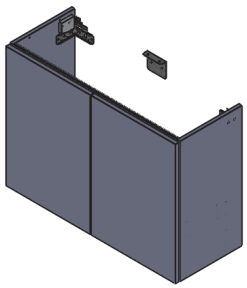

TOP : ADEO-17036-105

MATERIAL:	DO NOT SCALE DRAWING	SHEET 1 OF 1
SURFACE:	TITLE: ADEO-17036-101-02-04	A
LINEAR TOLERANCE: - mm ANGULAR TOLERANCE: - deg		
WEIGHT: g	DESCRIPTION: 640 x 350 x 900 PSL	
SCALE: 1:10 UNIT: mm FORMAT: A3		
AUTOR: C.Dormegnie CHECKER: JC.Devillers		
STATUS: APPROVED		
DATE: 29/01/2019		

This drawing is the exclusive property of **ADEO**.
Any reproduction in part or whole without the written permition of **ADEO** is prohibited.