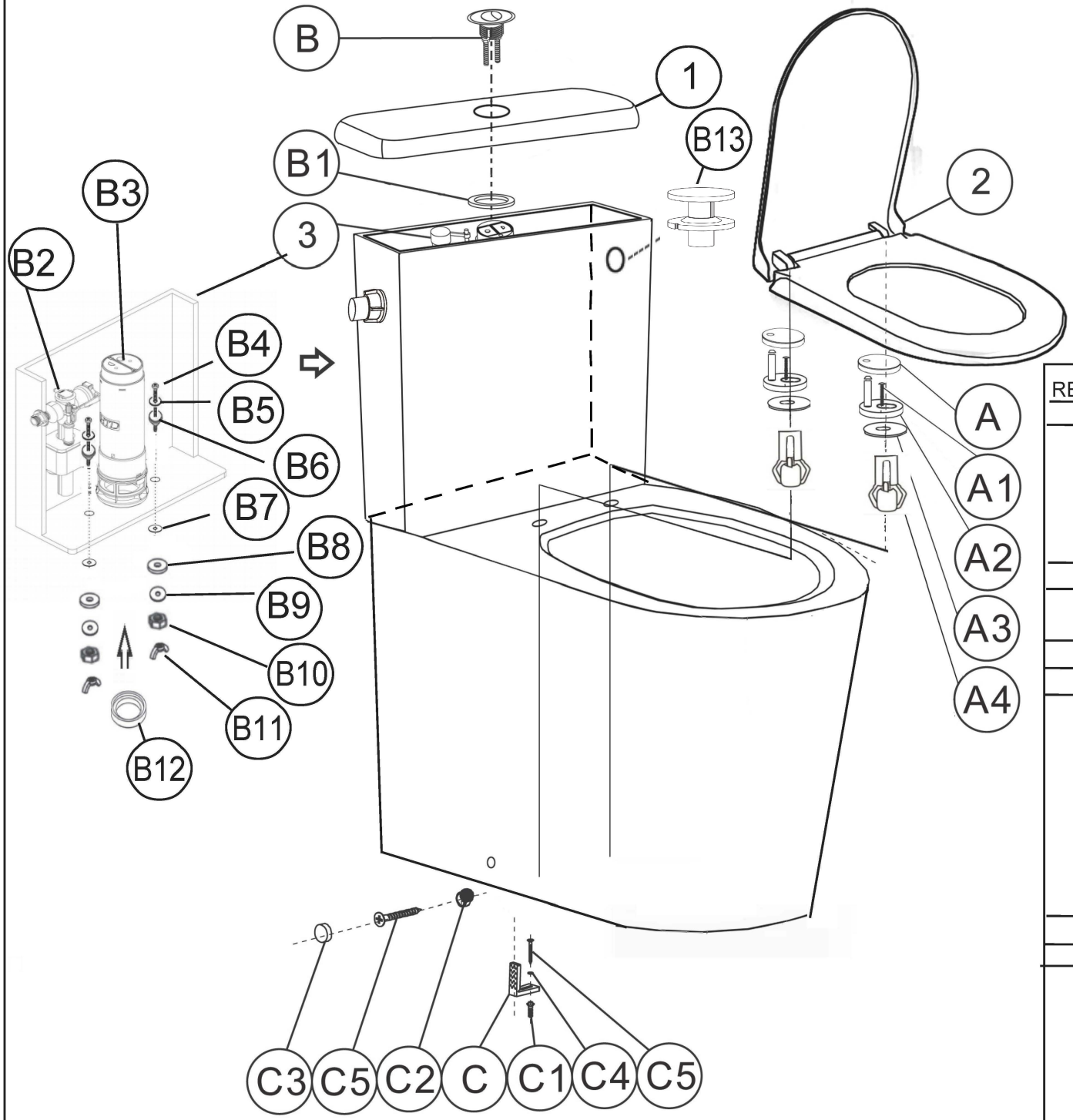

NEO WC 33A

AB 127SS

REFENCE NO.	CODE	QTY	SIZE	MATERIAL
JX024	2	1		UF
JX024H	A	2	DIA:54MM	Stainess steel
	A1	2	ST49*6MM	Stainess steel
	A2	2	DIA:53MM	Stainess steel
	A3	2	DIA:45MM	Rubber
	A4	2		Nylon
	3	1		
C3823	B	1		ABS
	B1	1		Plastic
B6	B2	1		ABS+POM
AB	B3	1		ABS+POM
TW418	B4	2	ST84*6MM	Stainess steel
	B5	2		Stainess steel
	B6	2		Rubber
	B7	2		Stainess steel
	B8	2		Rubber
	B9	2		Stainess steel
	B10	2		Stainess steel
	B11	2		Stainess steel
04	B12	1	DIA:88MM	SBR
05	B13			PP
TL309	C	2		Nylon
	C1	2		Nylon
	C2	2		Plastic
	C3	2		Plastic
	C4	2	DIA:18MM	Stainess steel
	C5	4	ST:72*5MM	Stainess steel
127LID	1	1		ceramic