No.	P/N	NAME	QTY
1	N702474	SA HANDLE HOUSING,EU AC HT	1
2	479253-00	SWITCH, MICRO	1
3	479254-00	SWITCH, MICRO	1
4	N726545	SA TRIGGER, EU TWIST AC HT	1
5	ITM90572096	SPRING, COMPRESSION	2
6	N727931	TWIST BUTTON BLACK	1
7	N727933	BUTTON LOCK OFF BLACK	1
8	N738885	COMPRESSION SPRING	1
9	373883	BLOCK, TERMINAL	1
10	ITM90562046	PROTECTOR, CORD	1
11	329301-00	CLAMP,CORD CORNER	1
12	373158	SCREW, NO.6 X 12.7	2
13	ITM90611771	CLIP, WIRE	1
14	330019-31	SCREW, PLSTC THD FORM, M3X12 T10	1
15	N704256	PLUNGER	1
16	N739403	COMPRESSION SPRING	1
17	N702477	SA MOTOR HOUSING,CM AC HT	1
19	N528748	SA SAWBLADE AND GEAR MPP 60CM	1
20	N506433	PIN HEADED BLADE GEAR	1
21	N506447	PLATE SUPPORT MPP HT	1
22	376614-01	SPACER, BLADE	1
23	ITM90527921	SCREW	1
24	148641-00	NUT, STOP ELAS	1
25	N506421	BLADE SUPPORT SHAFT MPP 5MM	1
26	N691358	HANDLE LINK	1
27	N714819	SA BAIL HANDLE	1
28	N695339	GUARD	1
29	N546037	SCREW, ST3.8 X 27 PAN	1
30	747329	SCREW NO.6 X 19 PAN.	20
31	N741974	CORDED POWER SUPPLY	1
32	N597333	BRUSH BOX	2
33	N719671	LASER ETCH - LABEL WARNING LASER ETCH BEHTSS51-GB/QS/XE	1
34	N696083	SA ARMATURE AND BEARING	1
35	N696111	SA FIELD	1
999	4138508-00	GREASE	0.01

NOTES:

1. ALL MATERIALS MUST COMPLY WITH ES100118.

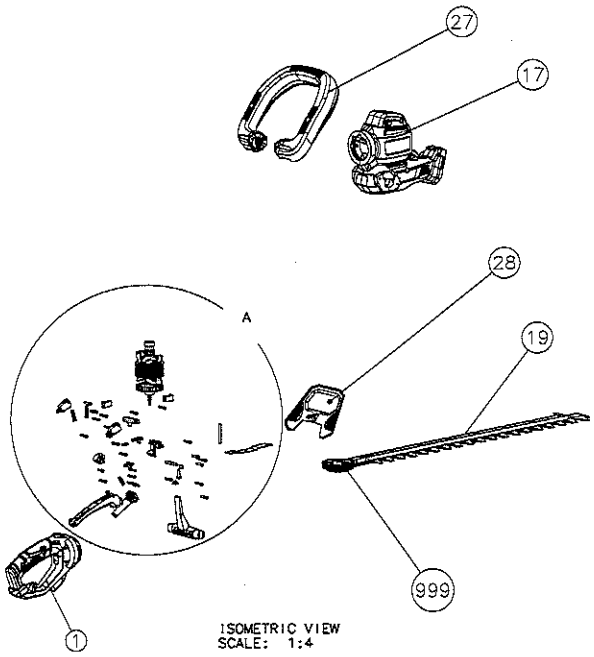

ISOMETRIC VIEW
SCALE: 1:4

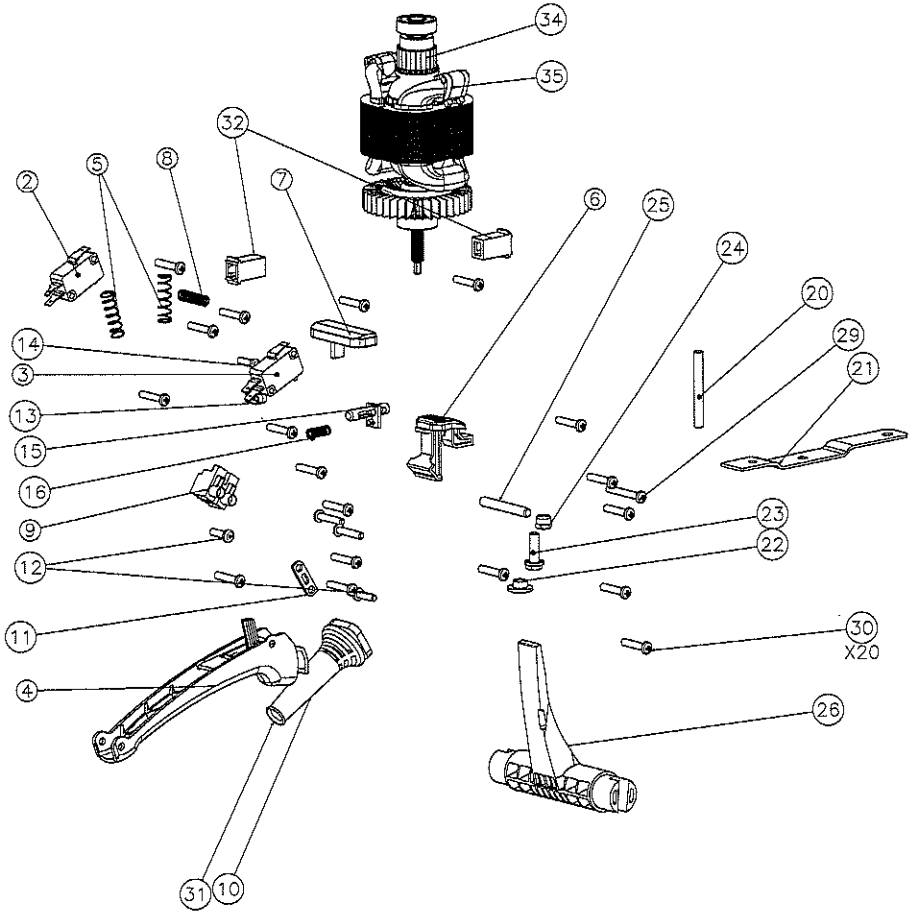

DETAIL A
SCALE: 1:1

GENERATED FROM: 3D	THIRD ANGLE PROJECTION	TOL UNLESS SPECIFIED: 0 ± 1 PLC DECS ± N/A; 2 PLC DECS ± N/A; ANGLES: ± N/A	BLACK & DECKER INC.
		ALL DIMENSIONS mm	DOC NO:
		SIZE: A0 / REF SCALE: 1:1	TITLE:
		SHEET: 1 OF 1	REVISION: --- VER/ITER: ---
			CHANGE:
COPYRIGHT © 2010 BLACK & DECKER INC.			FOR PART DATA REFER TO PART DETAILS REPORT ---

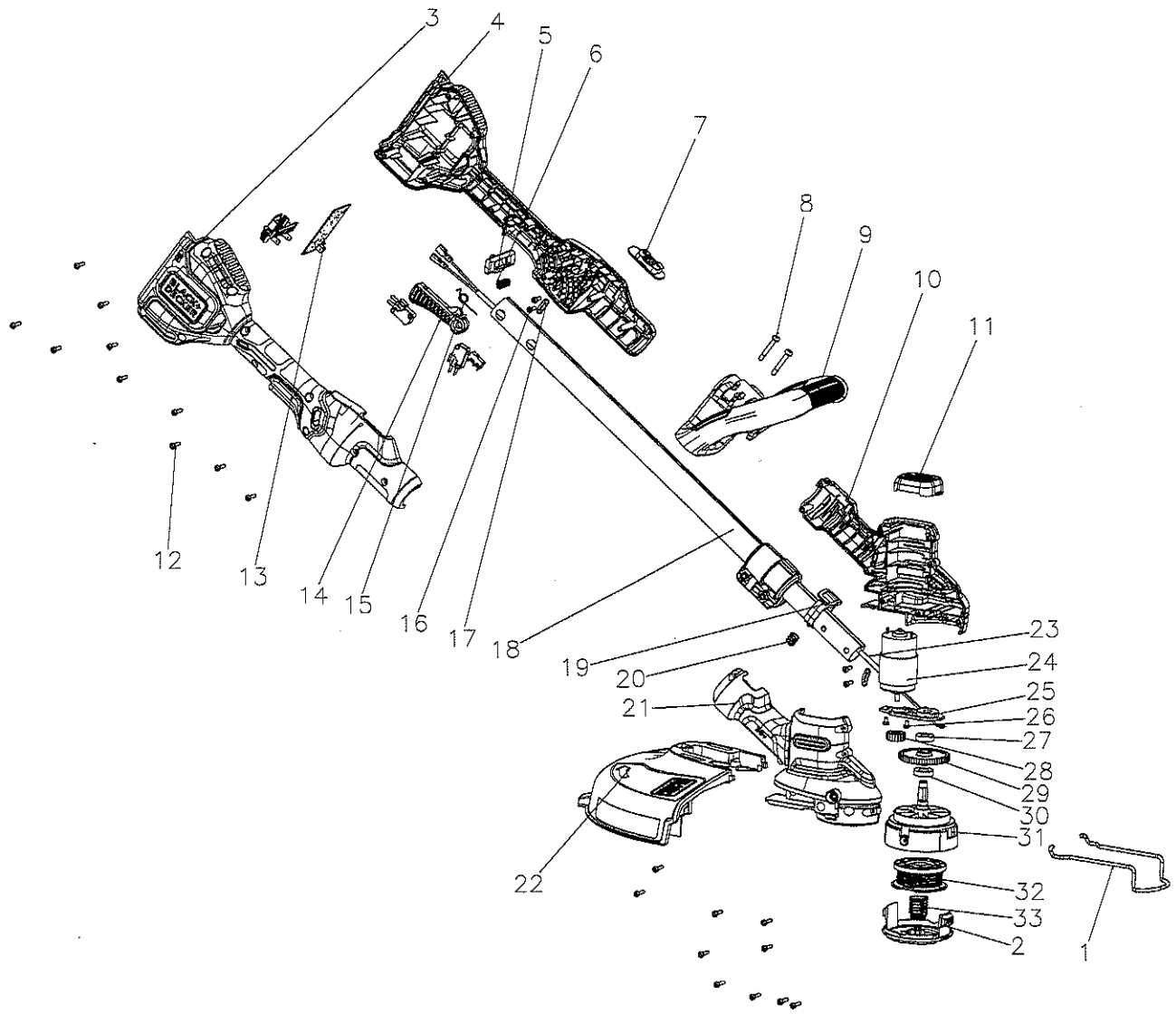

GENERATED FROM 3D

THIRD ANGLE PROJECTION

TOL UNLESS SPECIFIED
0 PLC DECS = N/A
2 PLC DECS = N/A
ANGLES: ± N/A

ALL DIMENSIONS ARE

SIZE: A0 | KEY SCALE: 1:1

SHEET: 1 OF 1

THIS DOCUMENT IS THE PROPERTY OF BLACK & DECKER INC. THE INFORMATION IN THIS DOCUMENT ARE CONFIDENTIAL AND SHALL NOT BE DISCLOSED TO ANY OTHER PERSON OR ENTITY WITHOUT THE WRITTEN PERMISSION OF BLACK & DECKER INC.

COPYRIGHT © 2019 BLACK & DECKER INC.

BLACK & DECKER INC.

DOC NO: N744776-EXP1

TITLE: BCSTA536

REVISION: --- VER/ITER: ---

CHANGE: NULL

FOR PART DATA REFER TO PART DETAILS REPORT

NO.	P/N	Description
1	ITM90571331C	GUIDE, EDGE
2	385022-03N	COVER
3	N744769	HANDLE COVER AFS
4	N744768	HANDLE ASSY AFS
5	N696027	LOCKOUT BUTTON
6	N599047	SPRING COMPRESSION LOCKOUT CMCST920
7	N692258	TWO SPEED BUTTON
8	ITM90579167	SCREW, MACHINE
9	N744766	SA AUX HANDLE
10	N688204	MOTOR HOUSING ASSY
11	N688407	MOTOR HOUSING CAP
12	330019-03	SCREW, PLSTC THD FORM, M3.5X16 T15
13	N733531	SA PCB for 36V ST POWER COMMAND EU
14	N744767	TRIGGER
15	ITM90612024	TORSION SPRING, TRIGGER
16	373158	SCREW. NO.6 X 12.7
17	821070	CORD CLAMP
18	N744765	SA POLE
19	ITM90570833	EDGING, BUTTON
20	ITM90550451	SPRING
21	N688205	MOTOR HOUSING COVER
22	N770557	SA GUARD
23	N745161	SA CURLY CABLE
24	ITM90588547	MOTOR, 36V
25	ITM90570258-01	PLATE, BEARING
26	ITM90577146	SCREW, MACHINE
27	330003-38	BEARING, BALL
28	ITM90575586	PINION
29	ITM90551148	GEAR
30	ITM90559833	BEARING, BALL
31	ITM90623710	SA SPOOL HOUSING AND GEAR
32	ITM90564281N	SA SPOOL AND LINE
33	ITM90566944	SPRING, SPOOL HOUSING

QTY
1
1
1
1
1
1
1
2
1
1
1
20
1
1
1
4
2
1
1
1
1
1
1
1
1
2
1
1
1
1
1
1
1