POS	PART NUMBER	DESCRIPTION	NUM
1	A	frame	1
2	B	cover	1
3	C	rope	4
4	D	nail	8
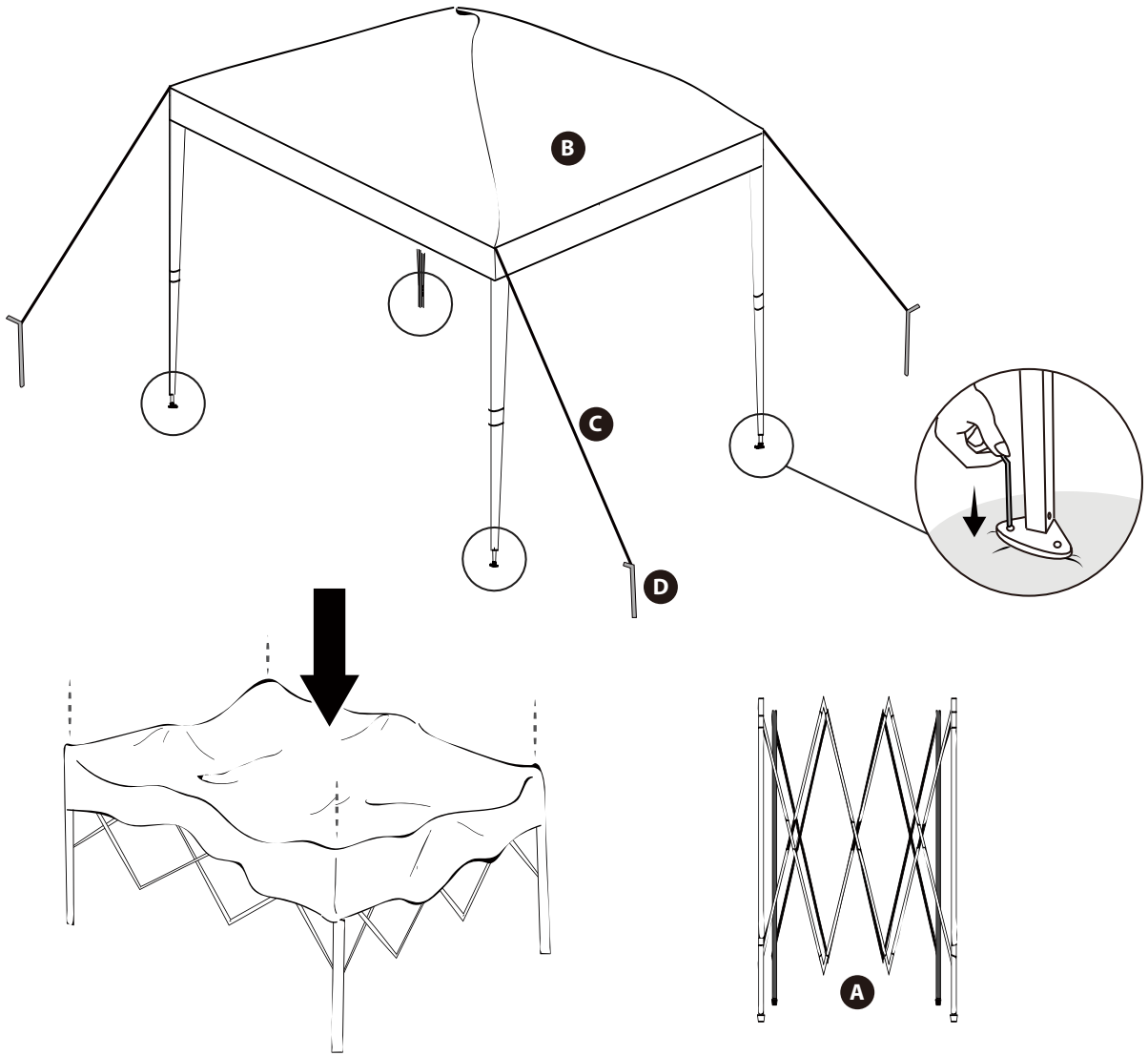
these label don't stick on the product because it can be see easly from the parts