BLACK+DECKER	BEHTS551	TYPE -

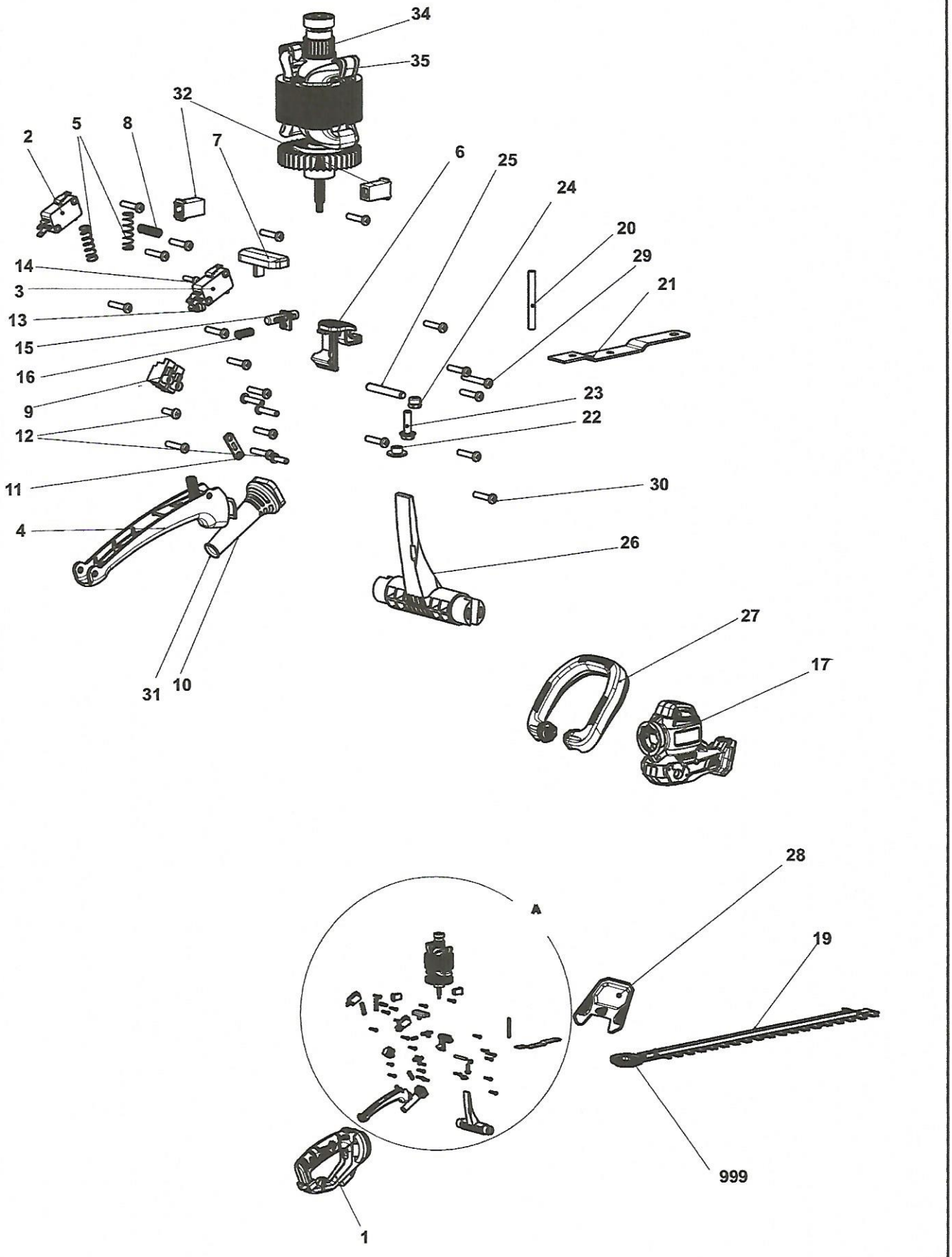

©

Black & Decker Bill of Materials - PARTS LIST

Product Number **BEHTS551**			Product Description **HEDGE TRIMMER**		Type Identifier **1**		
Item Number	**Quantity Per**	**Part Number**	**Part Description**	**General Description**	**Other Info**	**Market Codes**	**Refer to R.I.**
For EMEA region							
1	1	N702474	HANDLE SA				No
2	1	479253-00	SWITCH	Red plunger			No
3	1	479254-00	SWITCH	Black plunger			No
4	1	N726545	TRIGGER				No
5	2	90572096	SPRING				No
6	1	N727931	BUTTON				No
7	1	N727933	BUTTON				No
8	1	N738885	SPRING				No
9	1	373883	TERMINAL BLOCK				No
10	1	90562046	PLUG			QS	No
11	1	329301-00	CORD CLAMP				No
12	1	373158	SCREW				No
13	1	90611771	CLIP				No
14	1	330019-31	SCREW	M3x12 - T10 - Zinc			No
15	1	N704256	PLUNGER				No
16	1	N739403	SPRING				No
17	1	N702477	HOUSING MOTOR				No
19	1	N528748	BLADE & GEAR SA				No
20	1	N506433	GEAR				No
21	1	N506447	SUPPORT				No
22	1	376614-01	SPACER				No
23	1	90527921	BOLT				No
24	1	148641-00	LOCK-NUT				No
25	1	N506421	SUPPORT				No
26	1	N691358	LINK				No
27	1	N714819	HANDLE SA				No
28	1	N695339	GUARD				No
29	1	N546037	SCREW				No
30	20	747329	SCREW	No 6 x 19 - Pozi			No
31	1	N741974	CORD				No

Black & Decker Bill of Materials - PARTS LIST

Product Number **BEHTS551**			Product Description **HEDGE TRIMMER**		Type Identifier **1**		
Item Number	**Quantity Per**	**Part Number**	**Part Description**	**General Description**	**Other Info**	**Market Codes**	**Refer to R.I.**
32	2	N597333	BRUSH HOLDER				No
33	1	N719371	LABEL				No
34	1	N696083	ARMATURE				No
35	1	N696111	FIELD				No