Kubo

PX-0141

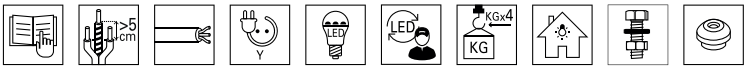

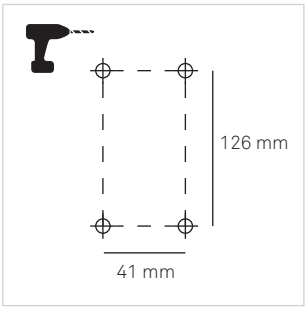

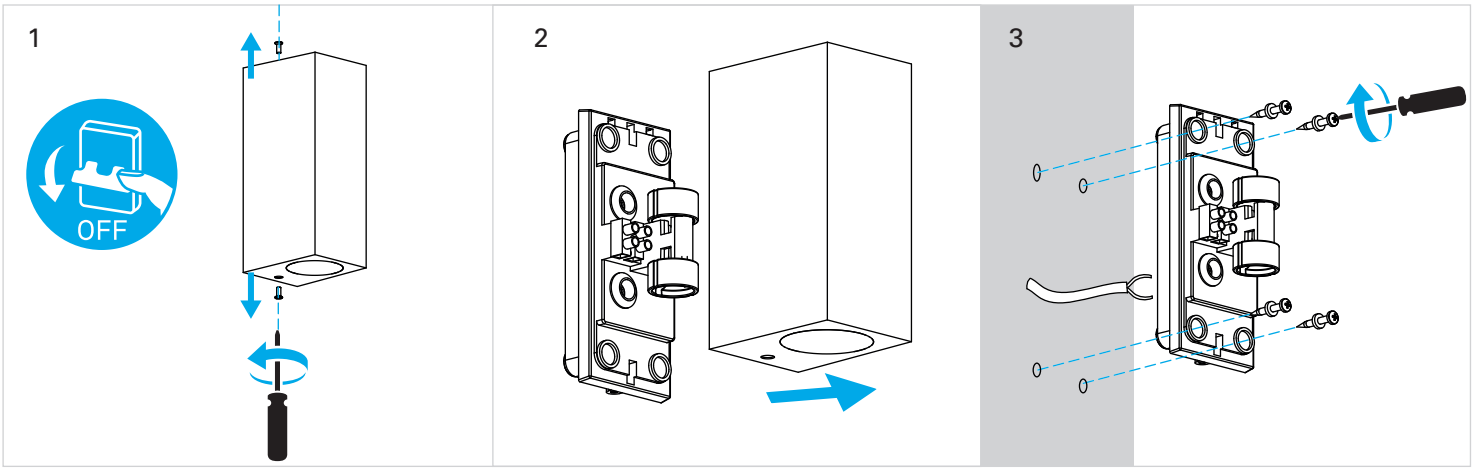

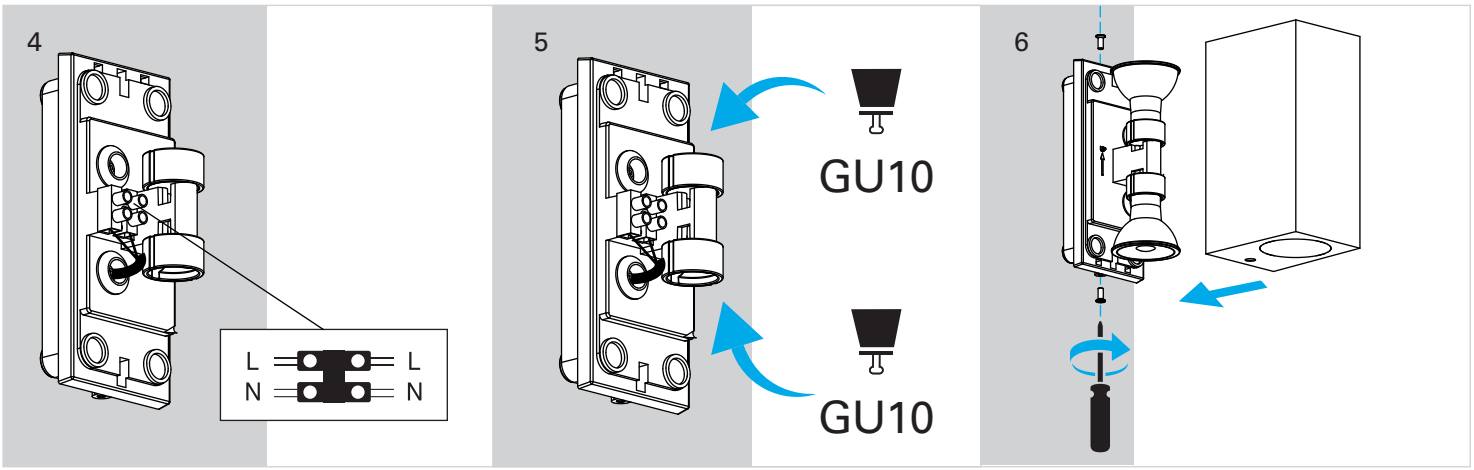

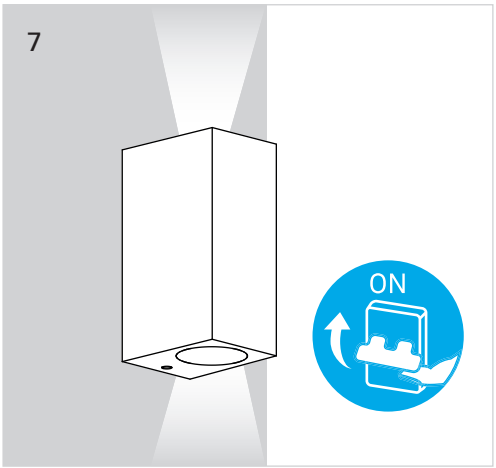

15-12-2020