PART NO.	79438_EXPLODED

REV.	MODIFY CONTENT	MODIFIED BY	DATE
R-1			

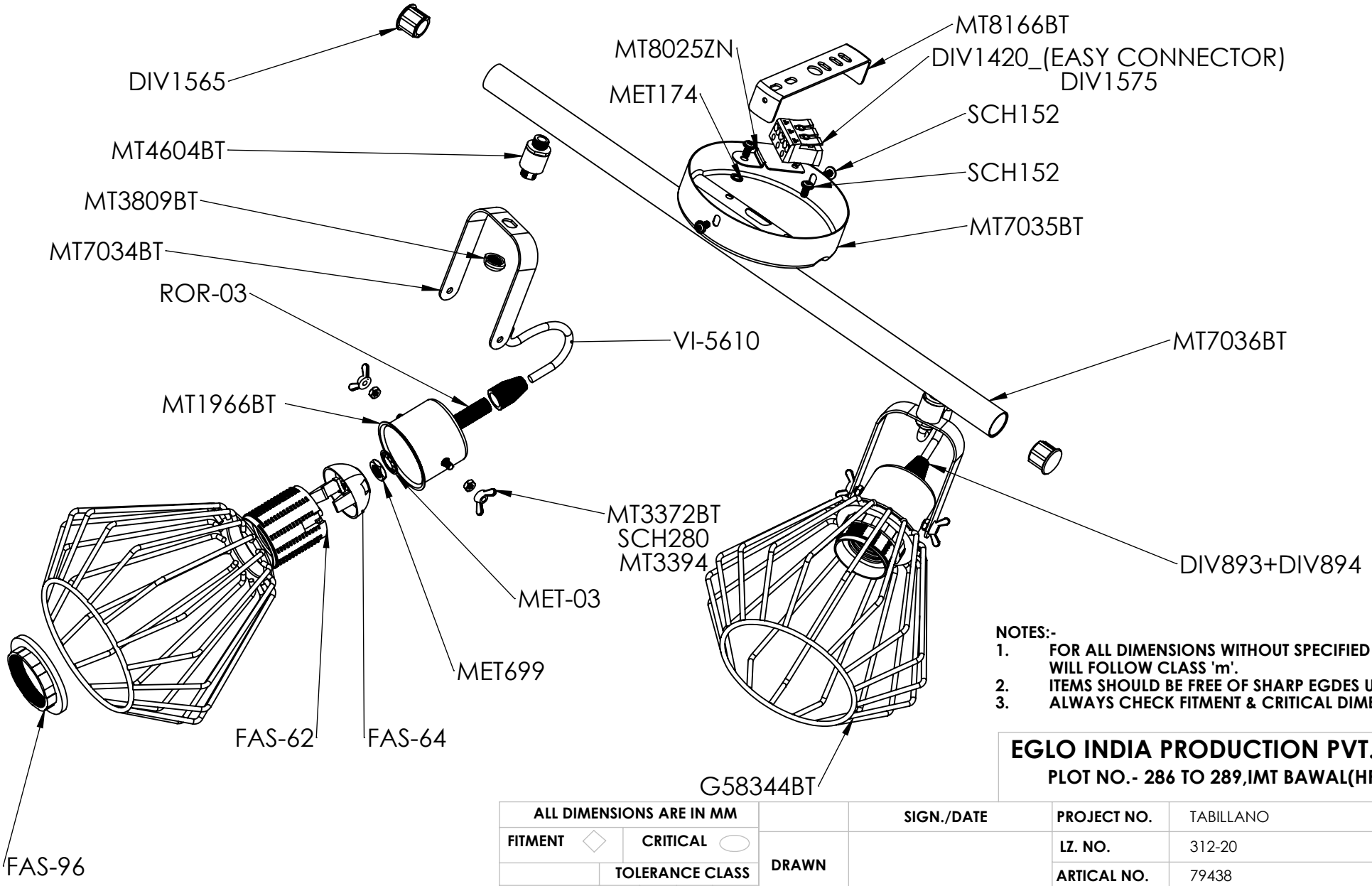

NOTES:-

1. FOR ALL DIMENSIONS WITHOUT SPECIFIED TOLERANCE WILL FOLLOW CLASS 'm'.
2. ITEMS SHOULD BE FREE OF SHARP EGDES UNLESS SPECIFIED.
3. ALWAYS CHECK FITMENT & CRITICAL DIMENSIONS.

ALL METAL PARTS BLACK STRUCTURE
BLACK PVC CABLE

EGLO INDIA PRODUCTION PVT. LTD.
PLOT NO.- 286 TO 289,IMT BAWAL(HR.)

ALL DIMENSIONS ARE IN MM				
FITMENT ◇	CRITICAL ⬭			
	TOLERANCE CLASS			
DIM. RANGE	m	c	v	r
0 > 6	±0.1	±0.3	±0.5	±0.75
6 > 30	±0.2	±0.5	±1	±1.5
30 > 120	±0.3	±0.8	±1.5	±3
120 > 600	±0.8	±2	±4	±6

	SIGN./DATE
DRAWN	
CHECK'ED	
APPROV'ED	

PROJECT NO.	TABILLANO
LZ. NO.	312-20
ARTICAL NO.	79438
PART NAME	79438_EXPLODED
DESCRIPTION	LS/2 E27 SCHWARZ 'TABILLANO'

MATERIAL TYPE	REV. NO.
------	----------

PART NO.	79438_ASSEMBLY

REV.	MODIFY CONTENT	MODIFIED BY	DATE
R-1			

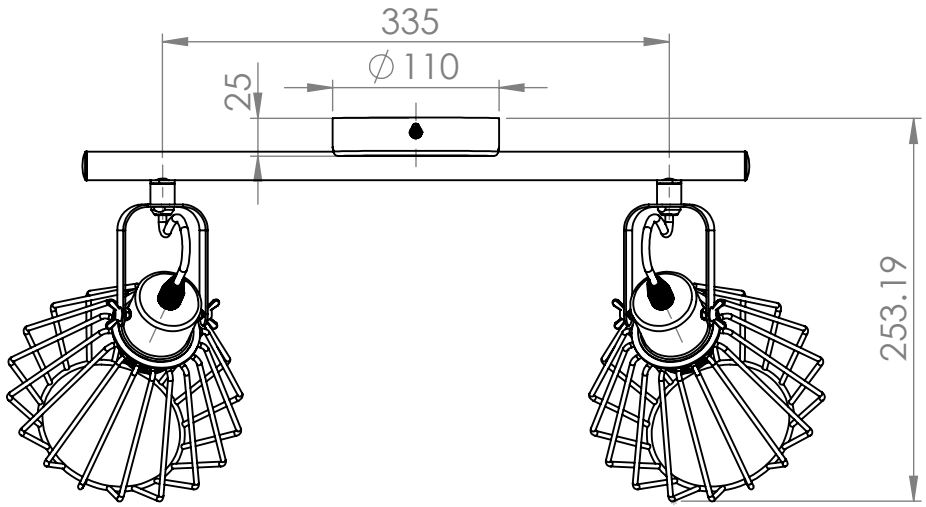

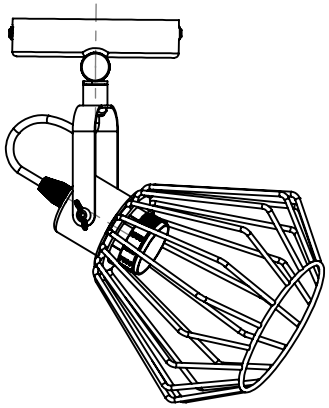

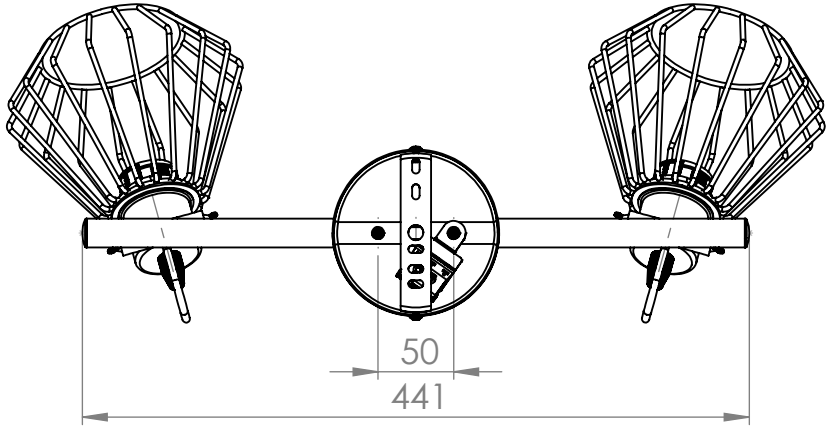

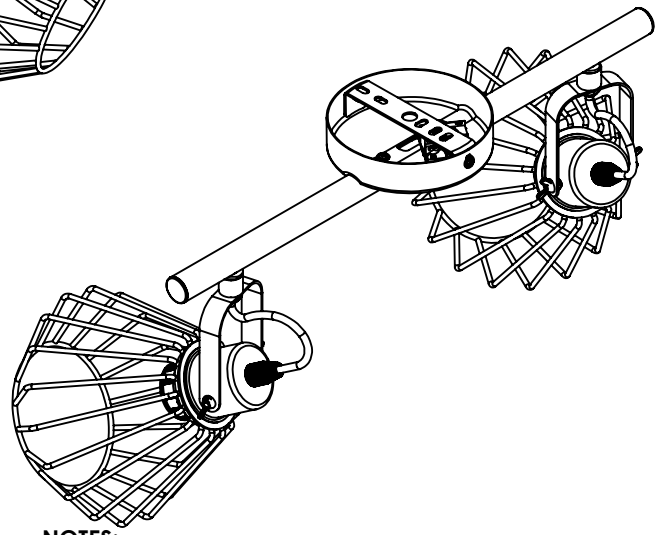

NOTES:-

1. FOR ALL DIMENSIONS WITHOUT SPECIFIED TOLERANCE WILL FOLLOW CLASS 'm'.
2. ITEMS SHOULD BE FREE OF SHARP EGDES UNLESS SPECIFIED.
3. ALWAYS CHECK FITMENT & CRITICAL DIMENSIONS.

EGLO INDIA PRODUCTION PVT. LTD.
PLOT NO.- 286 TO 289,IMT BAWAL(HR.)

ALL METAL PARTS BLACK STRUCTURE
BLACK PVC CABLE

ALL DIMENSIONS ARE IN MM				
FITMENT ◇	CRITICAL ⬭			
	TOLERANCE CLASS			
DIM. RANGE	m	c	v	r
0 > 6	±0.1	±0.3	±0.5	±0.75
6 > 30	±0.2	±0.5	±1	±1.5
30 > 120	±0.3	±0.8	±1.5	±3
120 > 600	±0.8	±2	±4	±6

	SIGN./DATE
DRAWN	
CHECK'ED	
APPROV'ED	

PROJECT NO.	TABILLANO
LZ. NO.	312-20
ARTICAL NO.	79438
PART NAME	79438_ASSEMBLY
DESCRIPTION	LS/2 E27 SCHWARZ 'TABILLANO'

MATERIAL TYPE	REV. NO.
------	----------