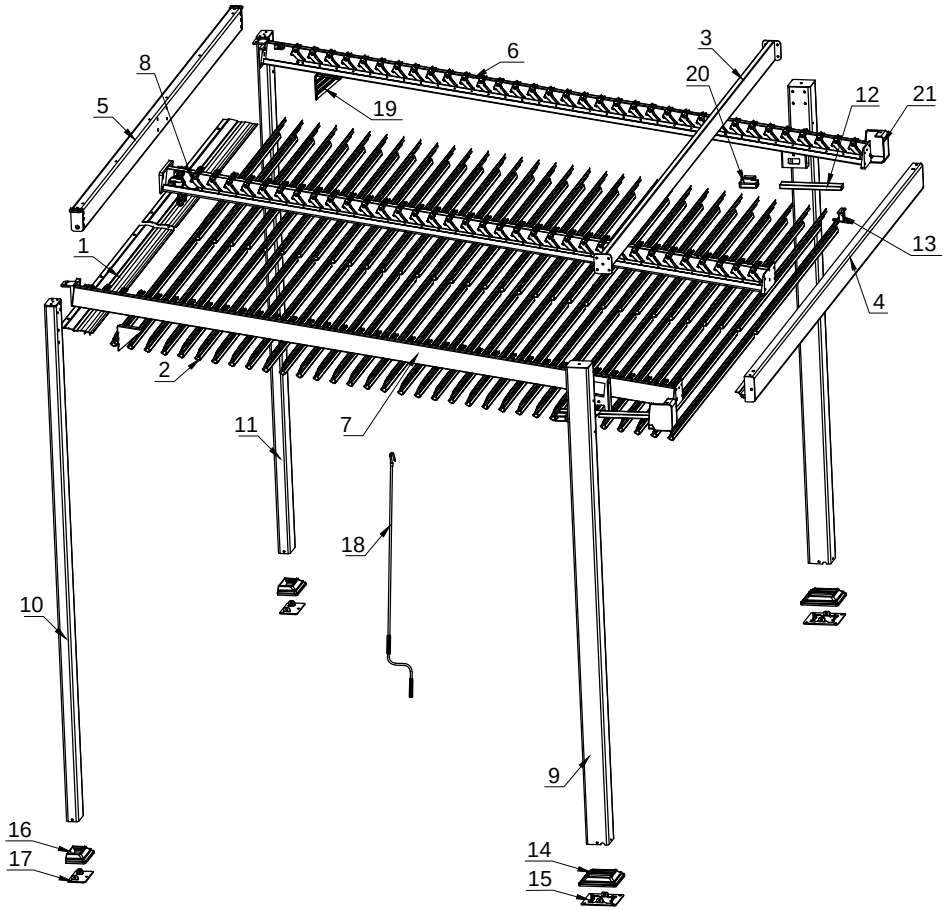


| ref. NO. | Serial | Name | Quantity | Texture | Specification |
|---|---|---|---|---|---|
| 21 | SZ5220 | Plastic joint(around) | 1 | ABS | 137*125*97 |
| 20 | SZ5219 | Water pipe joint | 2 | ABS | 125*90*34 |
| 19 | A-5552 | Rear corner suppor | 2 | Aluminum | 129.5*128*30.5*3.0 |
| 18 | A-5882 | Turbine rocker | 1 | | ϕ14*1380*195 |
| 17 | A-5583 | Rear foot plate | 2 | Aluminum | 175*90*3.0 |
| 16 | A-5584 | Rear foot cover | 2 | Aluminum | 190*100*38*1.2 |
| 15 | A-5647 | Front foot plate | 2 | Aluminum | 175*175*4.0 |
| 14 | A-5646 | Front foot cover | 2 | Aluminum | 190*190*38*1.5 |
| 13 | YJLT-022A | Top supporting pipe | 1 | Steel | 25*25*0.8*50 |
| 12 | YJLD-230C | Leaky pipe | 2 | Aluminum | 50*20*1.2*310 |
| 11 | YJLF-051A | Right rear foot tube | 1 | Aluminum | 115*60*1.6*2660 |
| 10 | YJLF-051A | Left rear foot tube | 1 | Aluminum | 115*60*1.6*2660 |
| 9 | YJLF-053 | Front foot tube | 2 | Aluminum | 115*115*1.6*2460 |
| 8 | YJLQ-367 | Middle crossbeam | 1 | Aluminum | 140*105*1.6*3055 |
| 7 | YJLQ-400 | Side crossbeam 2 | 1 | Aluminum | 100*80*1.3*3055 |
| 6 | YJLQ-400 | Side crossbeam 1 | 1 | Aluminum | 100*80*1.3*3055 |
| 5 | YJLF-051A | Rear crossbeam | 1 | Aluminum | 115*60*1.6*3340 |
| 4 | YJLQ-252A | Front crossbeam | 1 | Aluminum | 130*115*1.6*3550 |
| 3 | YJLF-044 | Top transverse pipe | 1 | Aluminum | 100*30*1.2*3555 |
| 2 | YJLQ-345 | Small leaf | 68 | Aluminum | 110*24.7*1.2*1710 |
| 1 | YJLQ-281 | Big leaf | 2 | Aluminum | 175*19*1.5*1710 |

GENERAL TOLERANCES:
LINEAR: L:±10mm W:±10mm H:±10mm ±2mm
ANGULAR:

| Rev | NAME | DATE |
|---|---|---|
| 01 | | |
| 02 | | |
| 03 | | |
| 04 | | |
| 05 | | |
| 06 | | |

ADEO - 135, rue Sadi Carnot
CS 00001 - 59790 RONCHIN
FRANCE

MATERIAU/FINISHING:

TITRE:

# Description

No. DE PLAN: GFA20634A

A3

REVISION

ECHELLE: 1:1 (Scale can be adapted)

Dimensions in mm

FEUILLE 1 SUR 1