SP1104 -4030

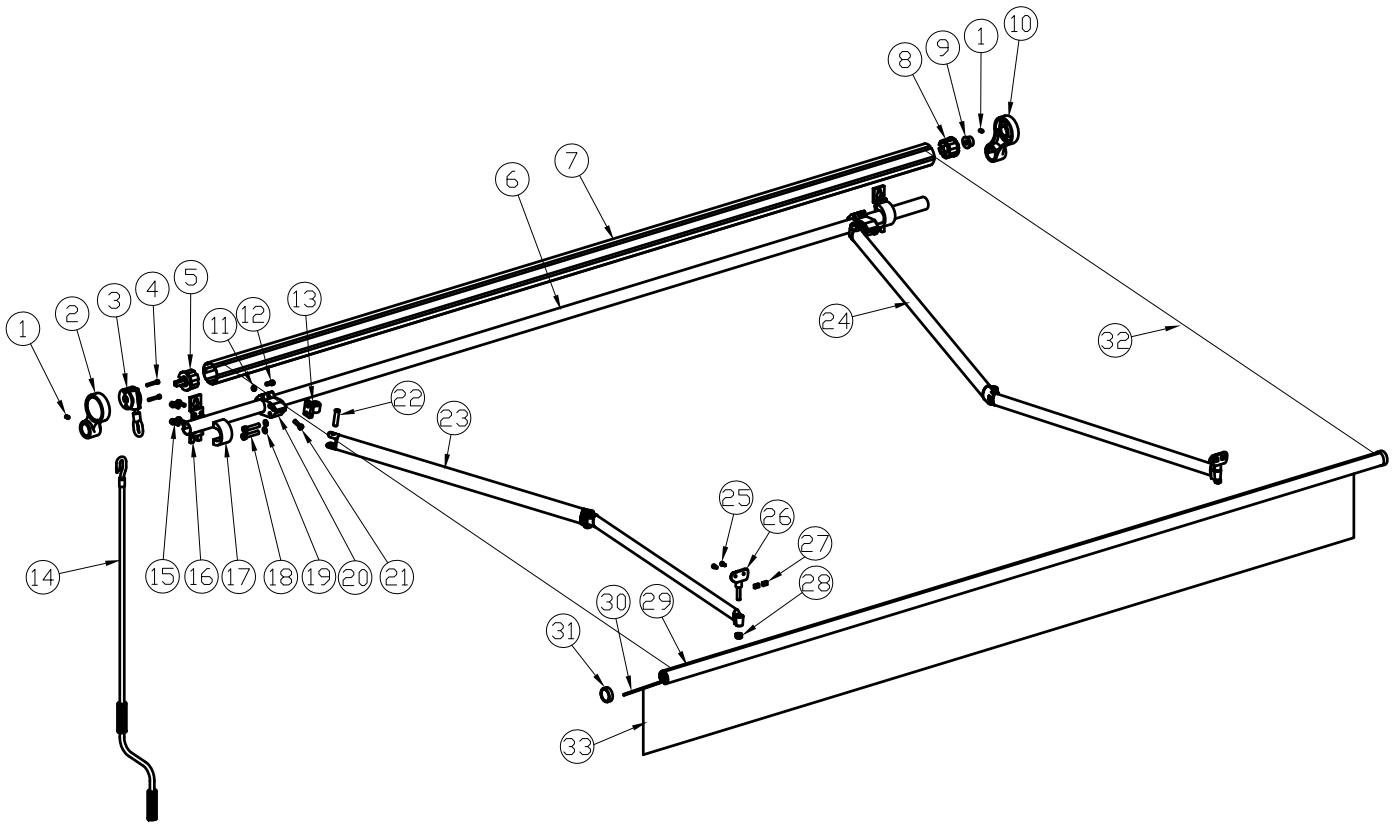

NO.	DESCRIPITION		material	qty
1	SCREW	M8X15	stainless steel	2
2	roller support left	158X118X41	ZL104	1
3	gear box	1/6!8		1
4	SCREW	M6X40	stainless steel	2
5	square shaft	Φ60X71	PA66+Q235	1
6	Torision bar	Φ40X1.2X 3930mm	A3	1
7	roller	Φ60X1.2X 3845mm	6063-T5	1
8	tube shaft	Φ60X54	PA66+Q235	1
9	large conica	Φ35XΦ12.5X20	PA66	1
10	roller support right	158X118X41	ZL104	1
11	flat gasket	Φ8	stainless steel	16
12	HEXAGON SOCKET HEAD SCRE	M8X35	stainless steel	4
13	briquette	48X24X40	ZG270-500	2
14	hand crank	1.6M	STEEL	1
15	HEXAGON SOCKET HEAD SCR	M8X25	stainless steel	12
16	brackets part1	153X24X50	6063-T5	3
17	brackets part2	75X43X50	6063-T5	3
18	hexagon bolt	M10X45	stainless steel	4
19	SCREW	Φ10	stainless steel	4
20	arm support	103X68X32	6063-T5	2
21	SCREW	M10X30	stainless steel	2
22	screw	Φ12X43	Q235	2
23	left arm	2900mm	STEEL	1
24	right arm	2900mm	STEEL	1
25	SCREW	M6X16	stainless steel	4
26	front bar line	89X52X22	ZL104	2
27	SCREW	M6	stainless steel	4
28	SCREW	M10	stainless steel	2
29	FRONT BAR	Φ42X1.2X 3852mm	6063-T5	1
30	fabric plastic line	Φ5.3X3820mm	PA66	3
31	FORN BAR COVER	Φ45X23	PA66	2
33	FLAP	3820X 230mm	240G/M2 POLYSTER	1
32	FABRIC	3820X 3000mm	240G/M2 POLYSTER	1