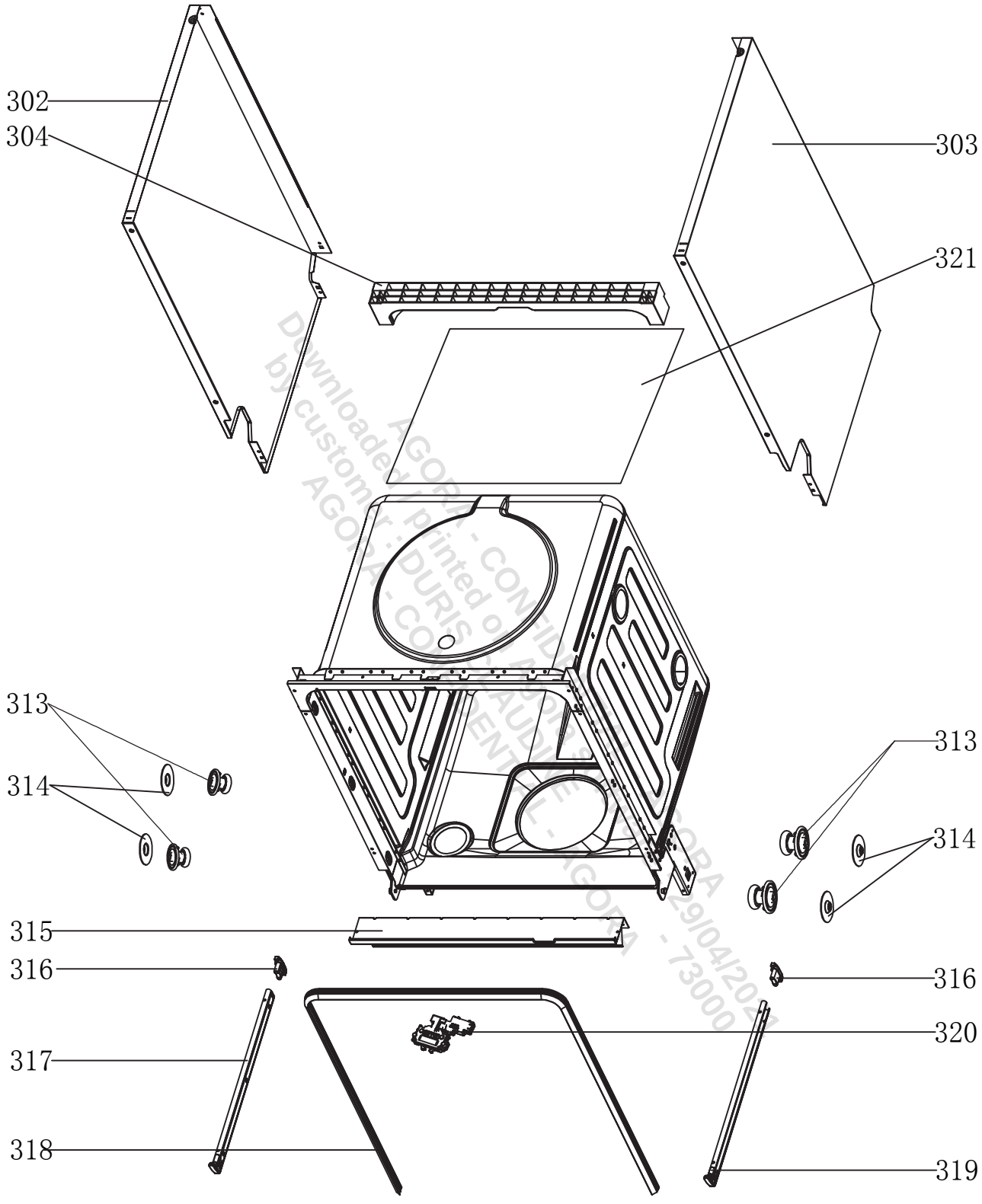

Downloaded / printed on AGORA - CONFIDENTIAL - 29/04/2024
by customer : DURIS - AUDIENCE - 73000
AGORA - CONFIDENTIAL - AGORA