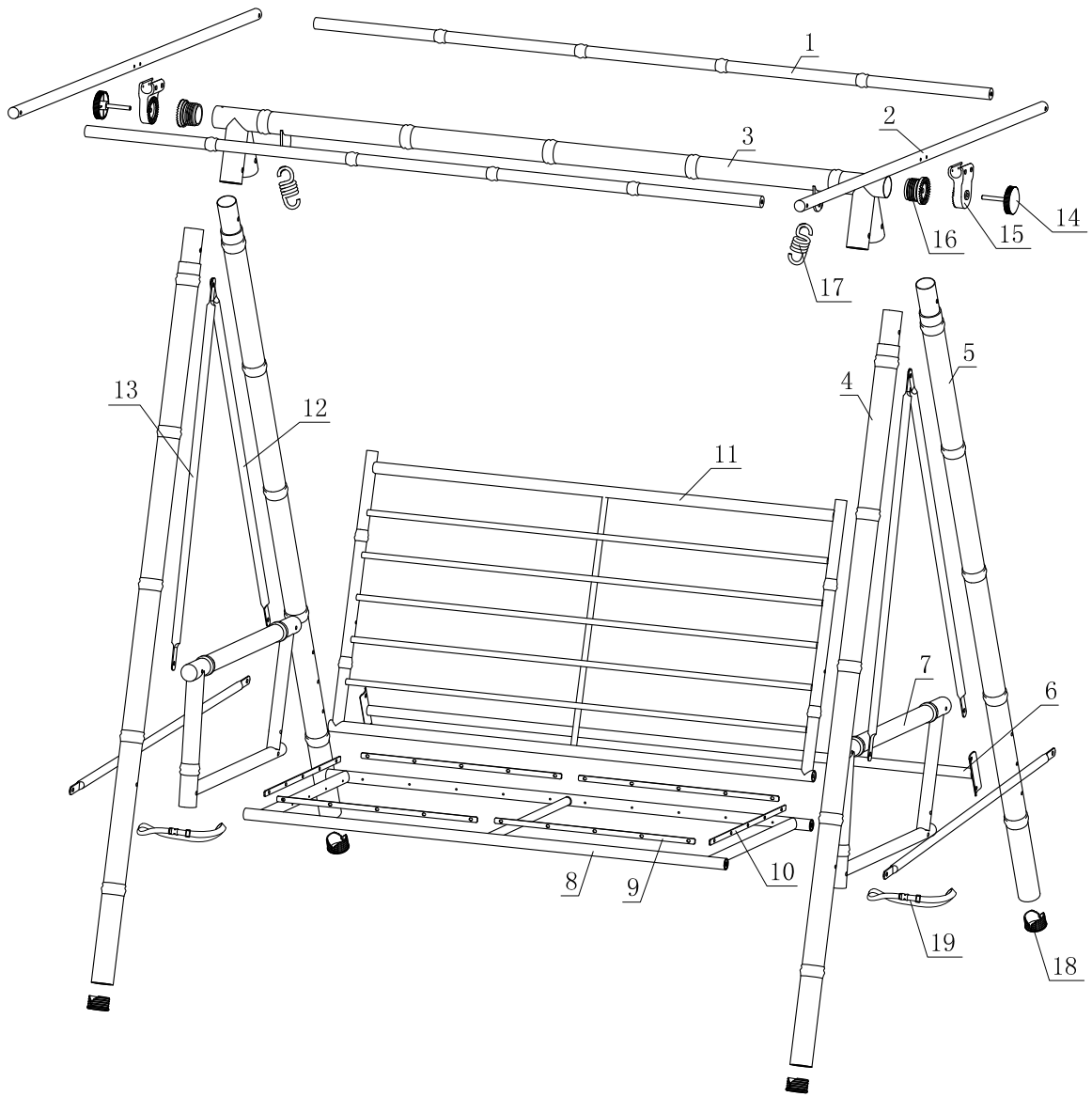

19		safety rope	2	ribbon/pp	25*1200
18	0111	door mat	4	PP	Φ48
17	A-8185A	spring	2	steel	180°
16	0189	top adjusting teeth 2	2	steel/PP	Φ59*42.5
15	SZ8152	top adjusting teeth 1	2	PP	60*95*35
14	0141	hand wheel screw	2	steel/PP	Φ59*50*M8
13	YJLT-175	front steeve tube	2	steel	Φ18*0.9*860
12	YJLT-175	after steeve tube	2	steel	Φ18*0.9*930
11	YJLT-037D	the back of a chair	1	steel	Φ25*0.9*1135
	YJLT-037D		1	steel	Φ25*0.9*1075
	YJLT-037D		2	steel	Φ25*0.9*590
	YJLT-033E		5	steel	Φ13*0.8*1075
	YJLT-033E		1	steel	Φ13*0.8*545
10	A-71740	flat iron 2	2	steel	12*2.5*450
9	A-71294	flat iron 1	4	steel	12*2.5*470
8	YJLT-037J		2	steel	Φ25*1.4*1135
	YJLT-037D		2	steel	Φ25*0.9*475
	YJLT-035A		1	steel	Φ19*1.0*475
7	YJTY-035D	armrest of chair	2	steel	Φ38*0.9*620
	YJTY-035D		2	steel	Φ38*0.9*300
	YJLT-038A		2	steel	Φ28*1.0*530
	YJLT-038A		2	steel	Φ28*1.0*250
6	YJLT-036E	middle connecting tube	1	steel	Φ22*0.8*1430
5	YJTY-012	back leg tube	2	steel	Φ48*0.9*1660
4	YJTY-012	front leg tube	2	steel	Φ48*0.9*1660
3	YJTY-012	supporting frame	4	steel	Φ48*0.9*140
	YJTY-012		1	steel	Φ48*0.9*1575
2	YJLT-037D	Straight tube of the top 2	2	steel	Φ25*0.9*1170
1	YJLT-037D	Straight tube of the top 1	2	steel	Φ25*0.9*1585
order number	mould number	name	quantity	material	remark

GENERAL TOLERANCES: L $^{+40mm}_{-0mm}$ W ±10mm H ±10mm
LINEAR: ±0.5mm
ANGULAR:

Rev	NAME	DATE
01		
02		
03		
04		
05		
06		

ADEO - 135, rue Sadi Carnot
CS 00001 - 59790 RONCHIN
FRANCE

MATERIAU/FINISHING:

TITRE:

Description

No. DE PLAN: GSS00371B

A3

REVISION

ECHELLE: 1:1 (Scale can be adapted) Dimensions in mm FEUILLE 1 SUR 1