Product exploded view

ADEO Ref	819563
EAN Code	3276007321364

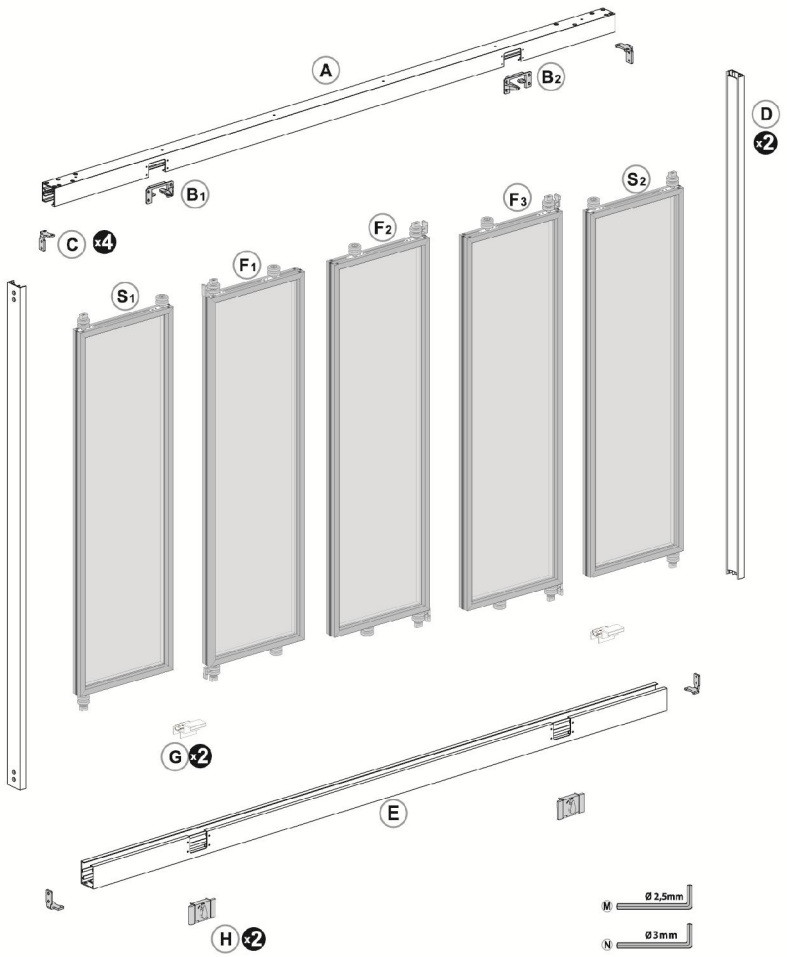

Parts No.	Name	Quantity	Material & Surface process
A	Top rail	1	Aluminium&Black
B1	Top gate	1	POM&Black
B2	Top gate	1	POM&Black
C	Rail connector	4	Carbon steel&black
D	Side post	2	Aluminium&Black
E	Bottom rail	1	Aluminium&Black
F1	Panel	1	Aluminium&Black / 4mm thickness clear temperad glass
F2	Panel	1	Aluminium&Black / 4mm thickness clear temperad glass
F3	Panel	1	Aluminium&Black / 4mm thickness clear temperad glass
G	Handle	2	Aluminium&Black
H	Bottom gate	2	PA;ABS&Black
S1	Panel	1	Aluminium&Black / 4mm thickness clear temperad glass
S2	Panel	1	Aluminium&Black / 4mm thickness clear temperad glass
M	Hex wrench	1	Carbon steel& galvanize
N	Hex wrench	1	Carbon steel& galvanize