LUCE ambiente Design®

SPRING

I-SPRING-PL30
I-SPRING-PL40

DOWNLOAD CATALOG

Imported by
Fan Europe Lighting s.r.l. a socio unico
Via Nuova Poggioreale 45A 80143 (NA)
www.faneurope.it

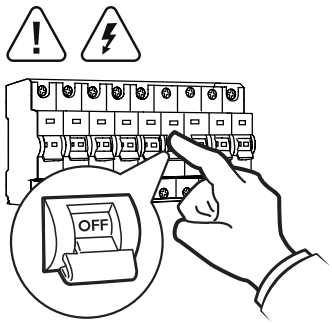

1

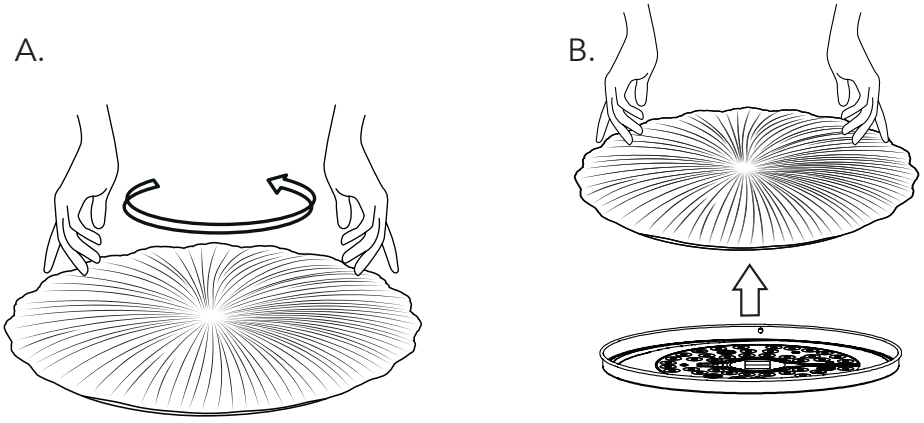

2

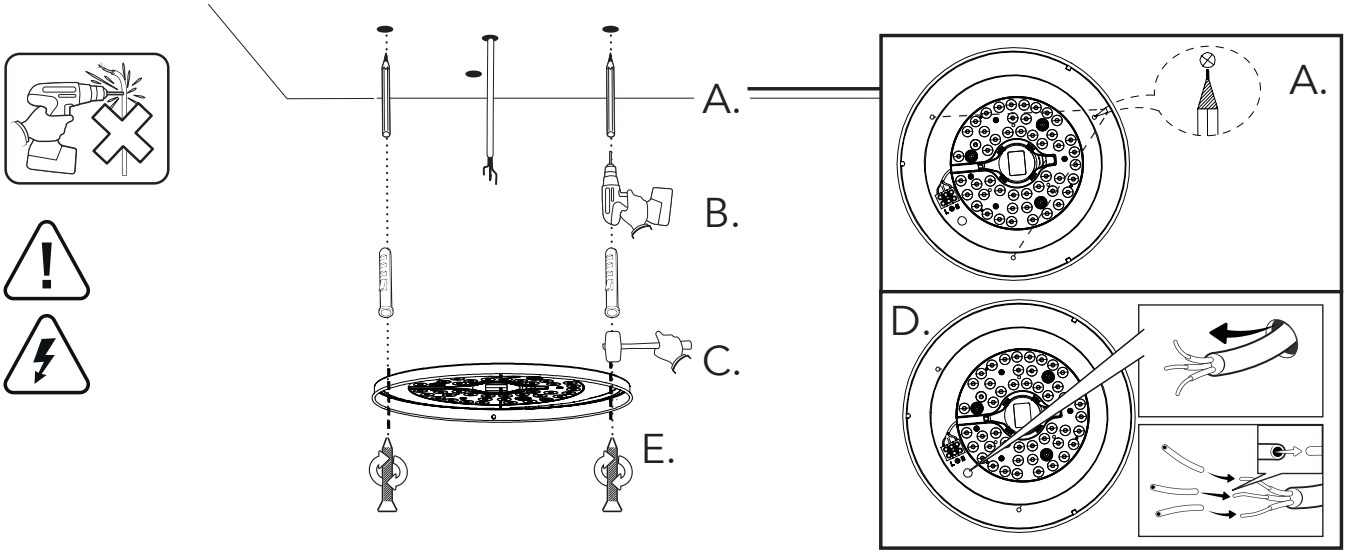

3

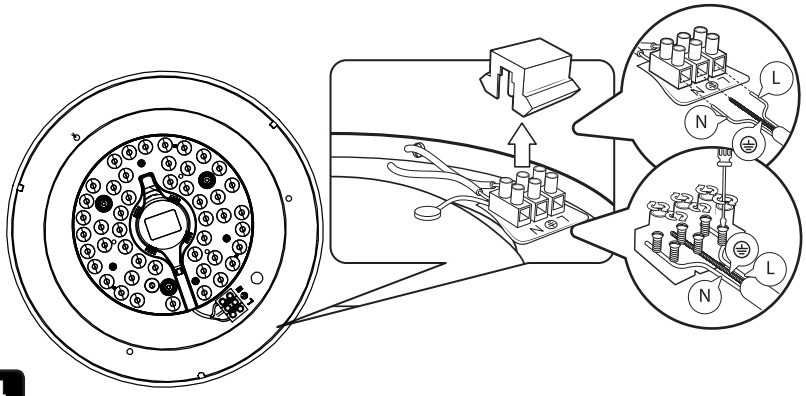

4

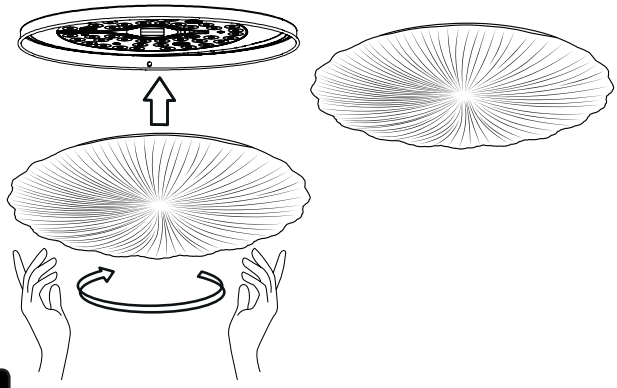

5

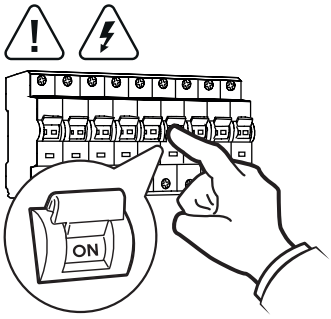

6

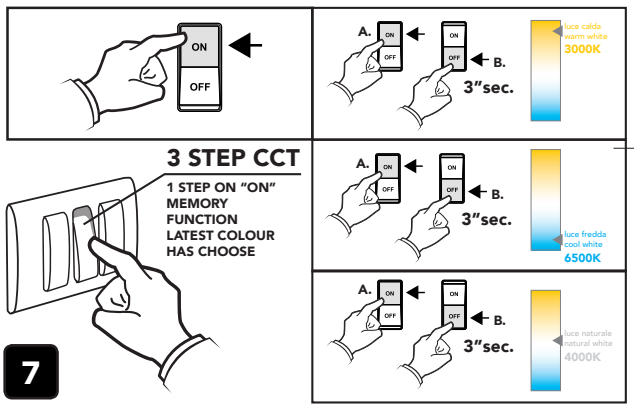

7