CONFLUO **PREMIUM** LINE

Premium **300** Premium **450** Premium **550** Premium **650** Premium **750** Premium **850** Premium **950**

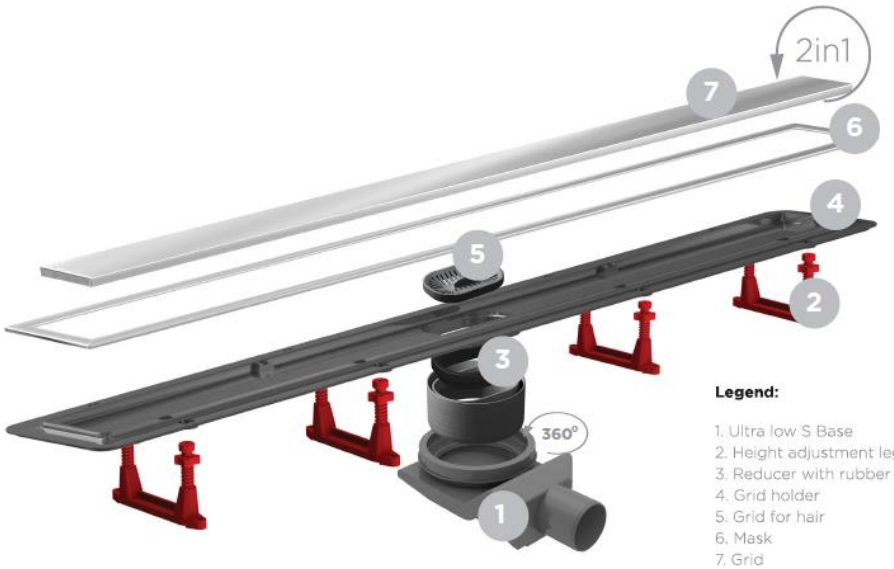

Legend:

1. Ultra low S Base
2. Height adjustment legs
3. Reducer with rubber ring
4. Grid holder
5. Grid for hair
6. Mask
7. Grid

52 mm
Min. installation height

48l/min
Maximum flow rate

2 in 1 system
2 in 1 system

SC
Self-cleaning base

K3
Load class of grid

Ø 50 output
Base diameter outlet

360° base rotation
Base rotation

25 mm
Water seal height

AISI 304
Material of grid