Simon Rack
SINCE 1964 - MANUFACTURER

1

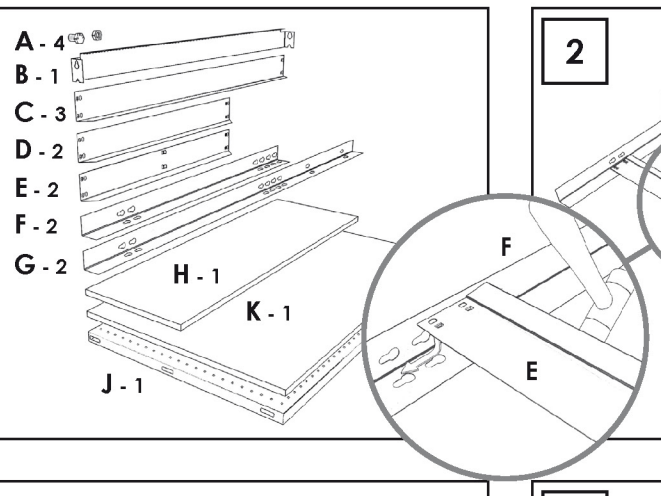

2

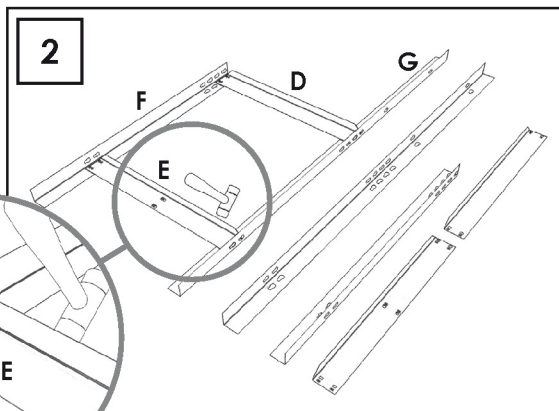

3

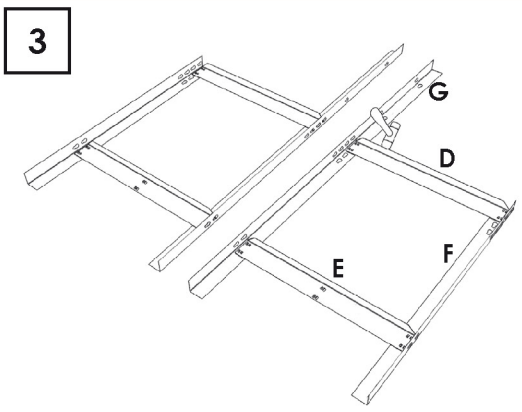

4

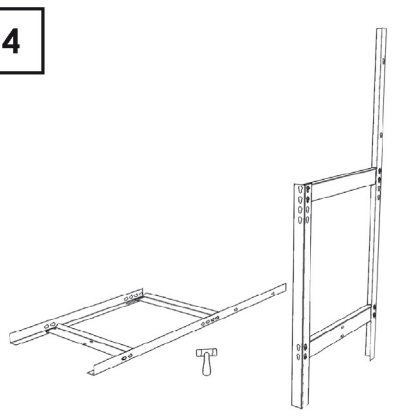

5

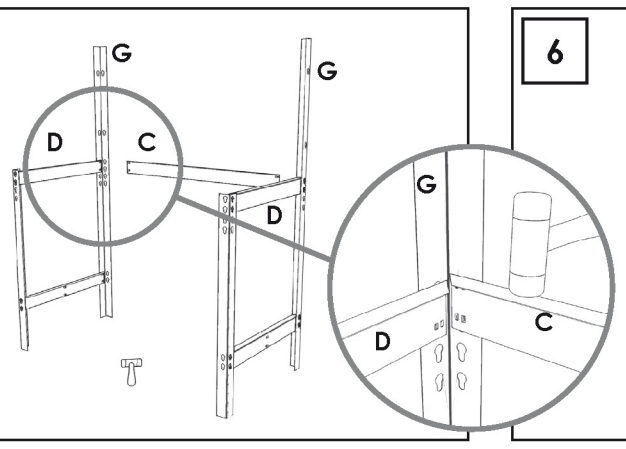

6

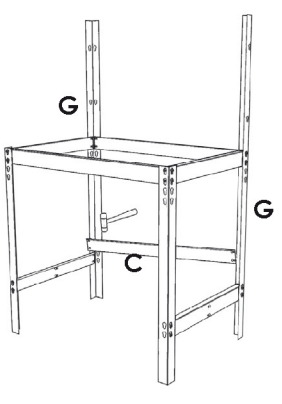

7

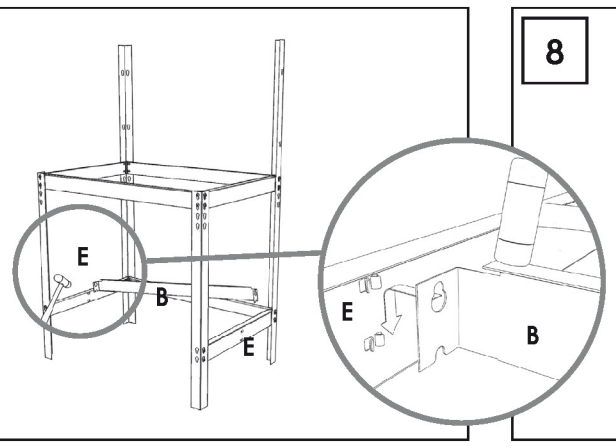

8

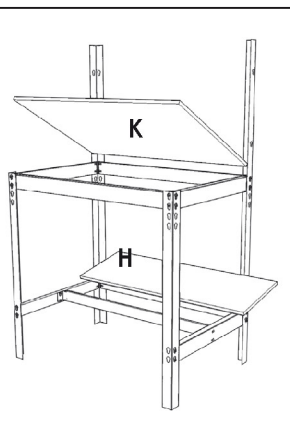

9

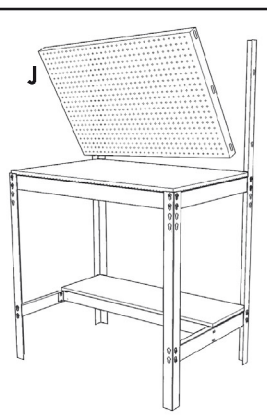

10

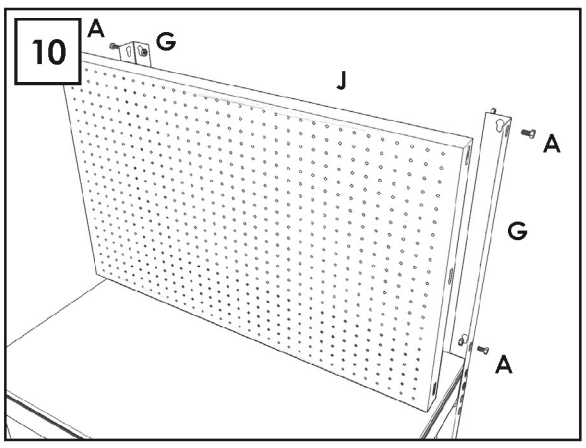

11

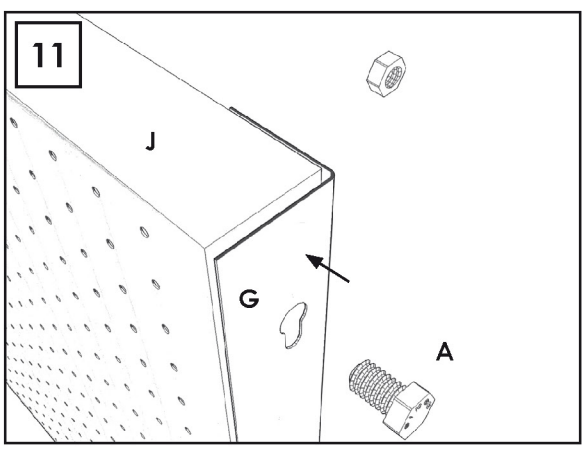

12

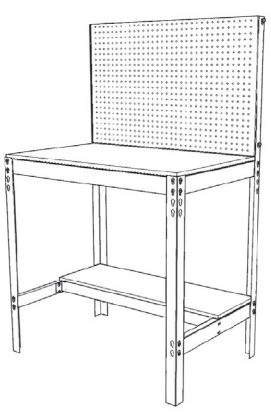

www.instructionsrack.com/bt2

www.simonrack.com • www.simonrack.com • www.simonrack.com •