Simon Rack
SINCE 1964 - MANUFACTURER

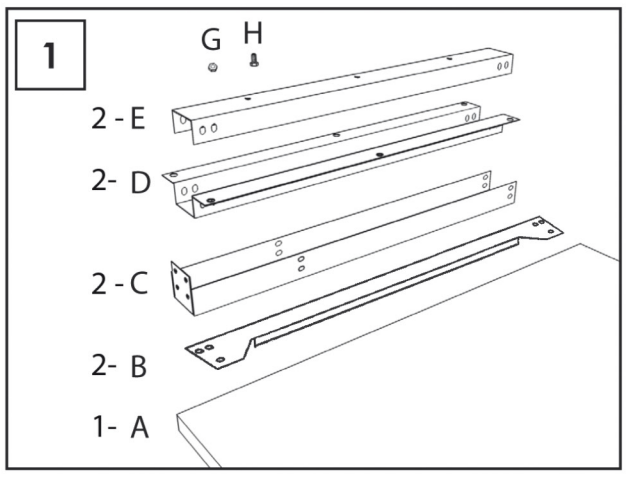

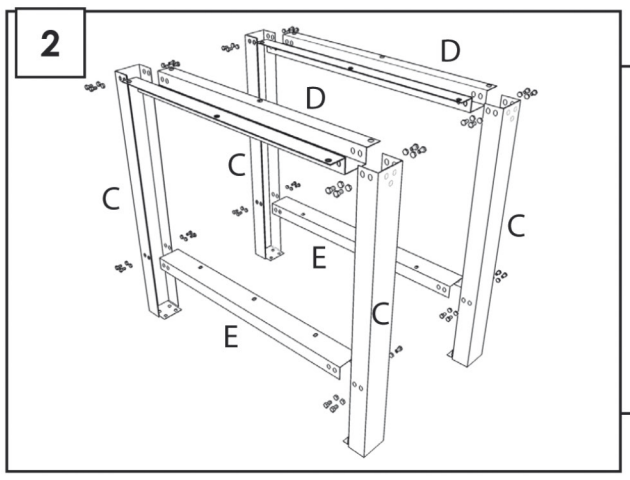

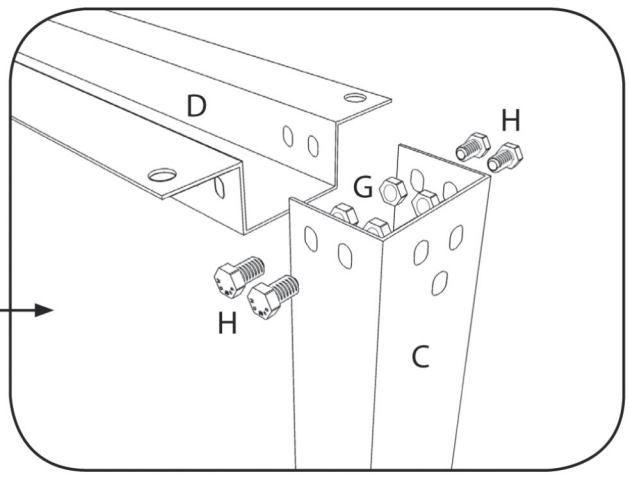

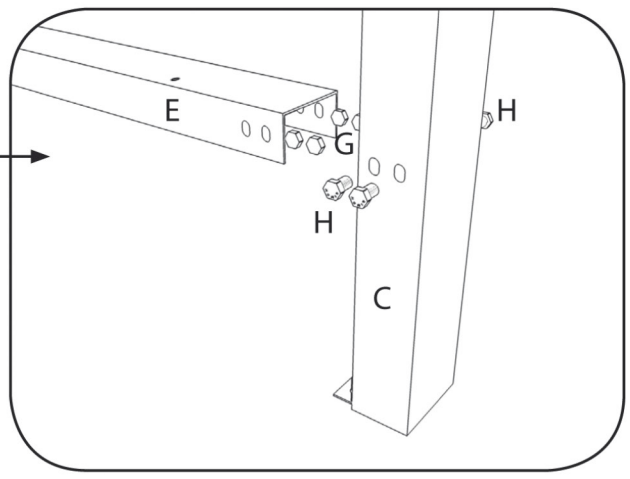

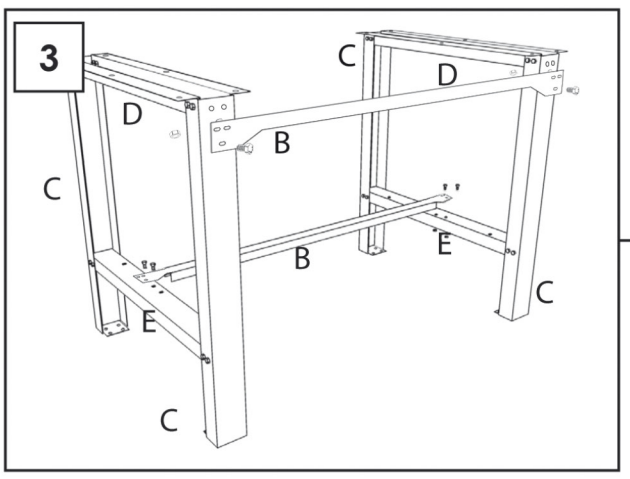

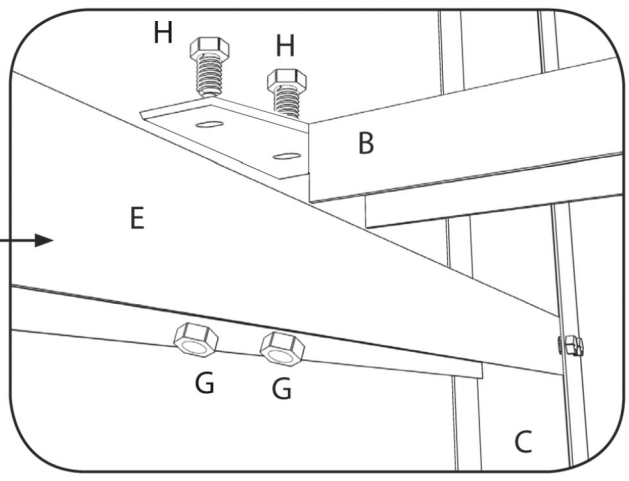

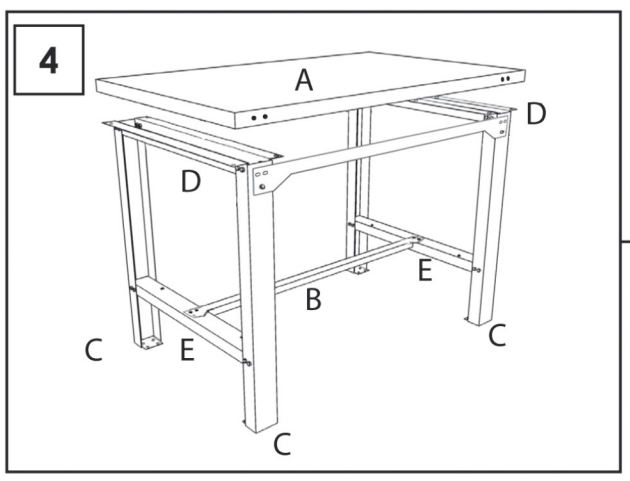

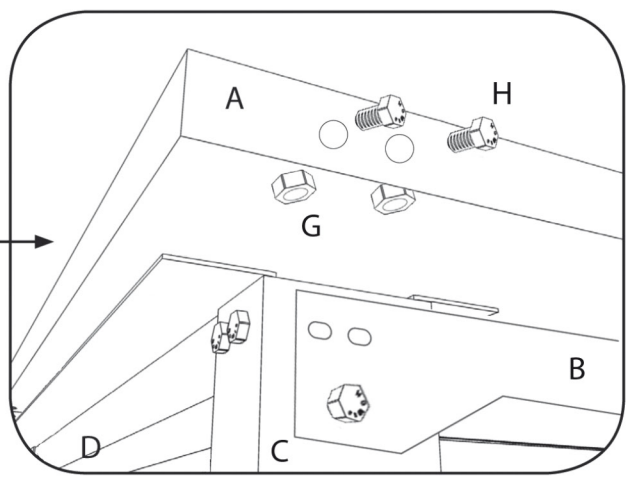

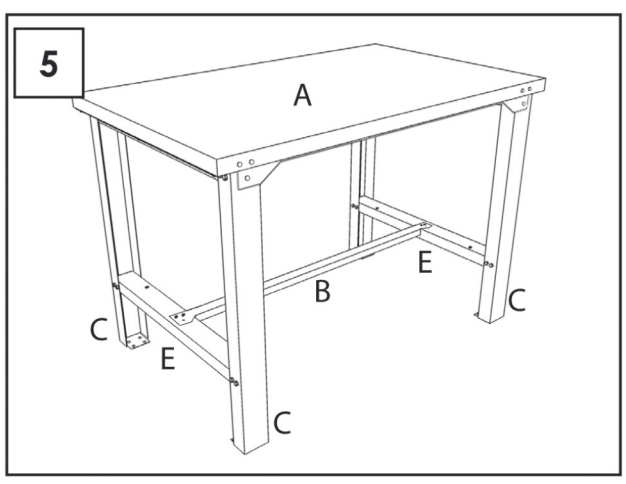

www.instructionsrack.com/bt6metal

www.simonrack.com • www.simonrack.com • www.simonrack.com • www.simonrack.com • www.simonrack.com • www.simonrack.com • www.simonrack.com • www.simonrack.com • www.simonrack.com • www.simonrack.com

SIMONCLASSIC

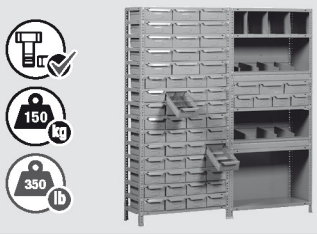

SIMONCLICK

SIMONTALLER

SIMONAUTO

SIMONWORK

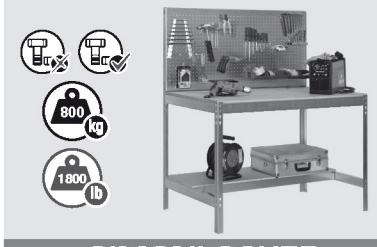

SIMONLOCKER

SIMONOFFICE

SIMONHOME

SIMONGARDEN

SIMONTITÁN

SIMONINOX

SIMONINDUSTRIAL

SIMONPALET

SIMONLEVER

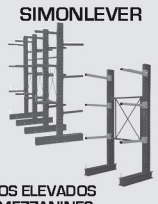

ALTILLOS Y PASILLOS ELEVADOS
PLATFORMS AND MEZZANINES
LAGERBÜHNEN • PLATES-FORMES ET MEZZANINES

* Kg / lb por bandeja con carga uniformemente repartida
Kg / lb per shelf uniformly distributed load
Kg / lb pro fach bei gleichmäßig verteilter last
Kg / lb par plateau avec charge uniformément répartie