Simon Rack
SINCE 1964 - MANUFACTURER

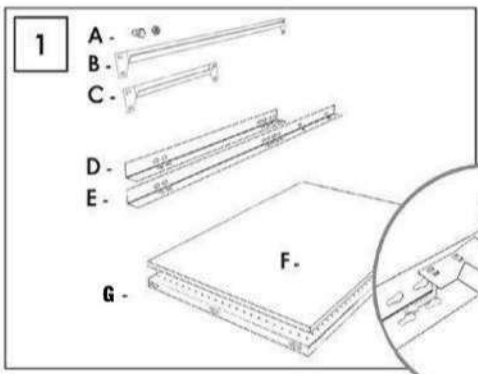

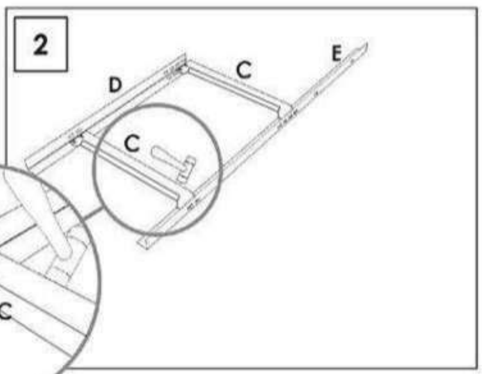

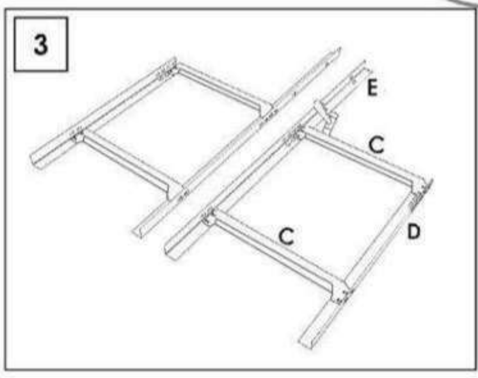

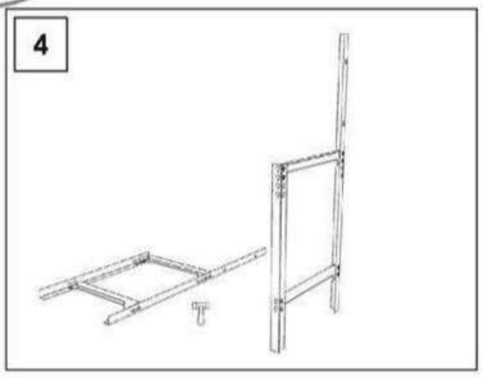

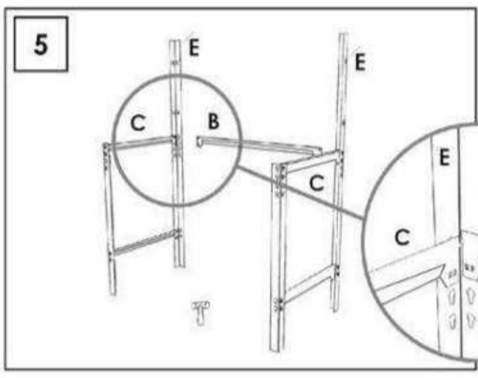

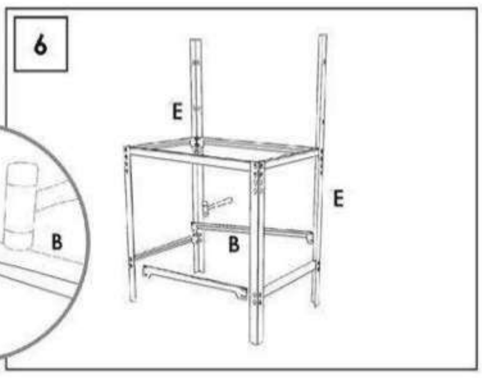

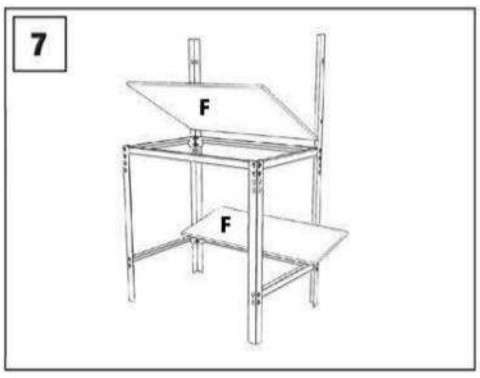

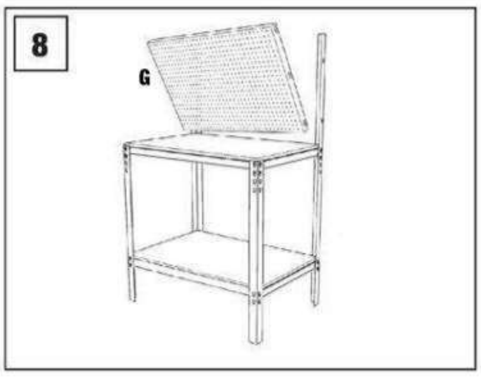

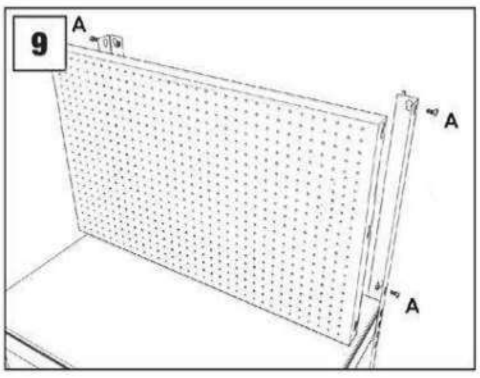

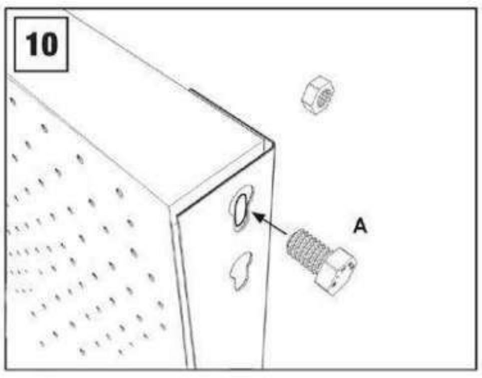

www.simonrack.com • www.simonrack.com • www.simonrack.com • www.simonrack.com • www.simonrack.com • www.simonrack.com • www.simonrack.com • www.simonrack.com • www.simonrack.com • www.simonrack.com • www.simonrack.com

SIMONCLASSIC

150 kg
350 lb

SIMONCLICK

400 kg
900 lb

SIMONTALLER

700 kg
1550 lb

SIMONAUTO

300 kg
660 lb

SIMONWORK

800 kg
1800 lb

SIMONLOCKER

SIMONOFFICE

275 kg
600 lb

SIMONHOME

150 kg
350 lb

SIMONGARDEN

600 kg
1350 lb

SIMONTITÁN

900 kg
1990 lb

SIMONINOX

SIMONINDUSTRIAL

SIMONPALET

4500 kg
9950 lb

SIMONLEVER

ALTILLOS Y PASILLOS ELEVADOS
PLATFORMS AND MEZZANINES
LAGERBÜHNEN • PLATES-FORMES ET MEZZANINES

* Kg / lb por bandeja con carga uniformemente repartida
Kg / lb per shelf uniformly distributed load
Kg / lb pro fach bei gleichmäßig verteilter last
Kg / lb par plateau avec charge uniformément répartie