| Ref | Component Name | Qty | Dimension |
|---|---|---|---|
| A | MIDDLE SLAT / NAN GIỮA | 1 | 12x293x2060 |
| B | OUTER SLAT / NAN BÌA | 2 | 12x293x2060 |
| C | SLAT SUPPORT / ĐỠ NAN | 5 | P715, L805 |
| D | SIDE BAR / DIỀM BÀN NGẮN | 2 | P786, L769 |
| E | SIDE BAR / DIỀM BÀN DÀI | 2 | P560, L1942 |
| F | LEG / CHÂN | 4 | P078, L729 |

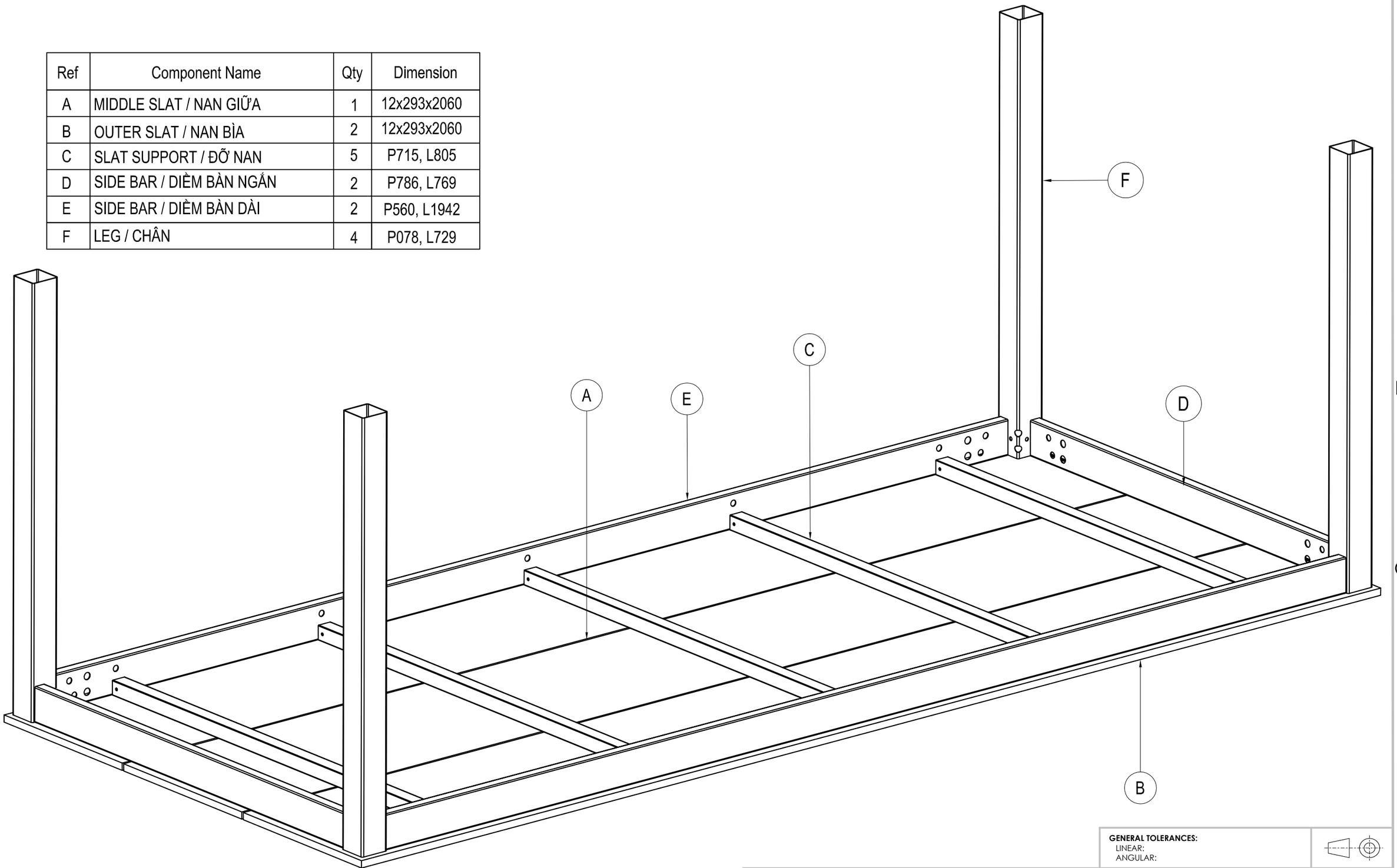


**GENERAL TOLERANCES:**
LINEAR:
ANGULAR:

| Rev | NAME | DATE |
|---|---|---|
| 01 | Scancom | 150422 |
| 02 | Scancom | 240822 |
| 03 | | |
| 04 | | |
| 05 | | |
| 06 | | |


**ADEO** - 135, rue Sadi Carnot
CS 00001 - 59790 RONCHIN
FRANCE


MATERIAU/FINISHING:
DURABOARD

TITRE:
DINING TABLE NATERIAL DORA II FIX
DURABOARD 206X89X75 DARK GREY

No. DE PLAN 3276007426441 | A3 | REVISION

ECHELLE: 1:1 (Scale can be adapted) | Dimensions in mm | FEUILLE 1 SUR 1

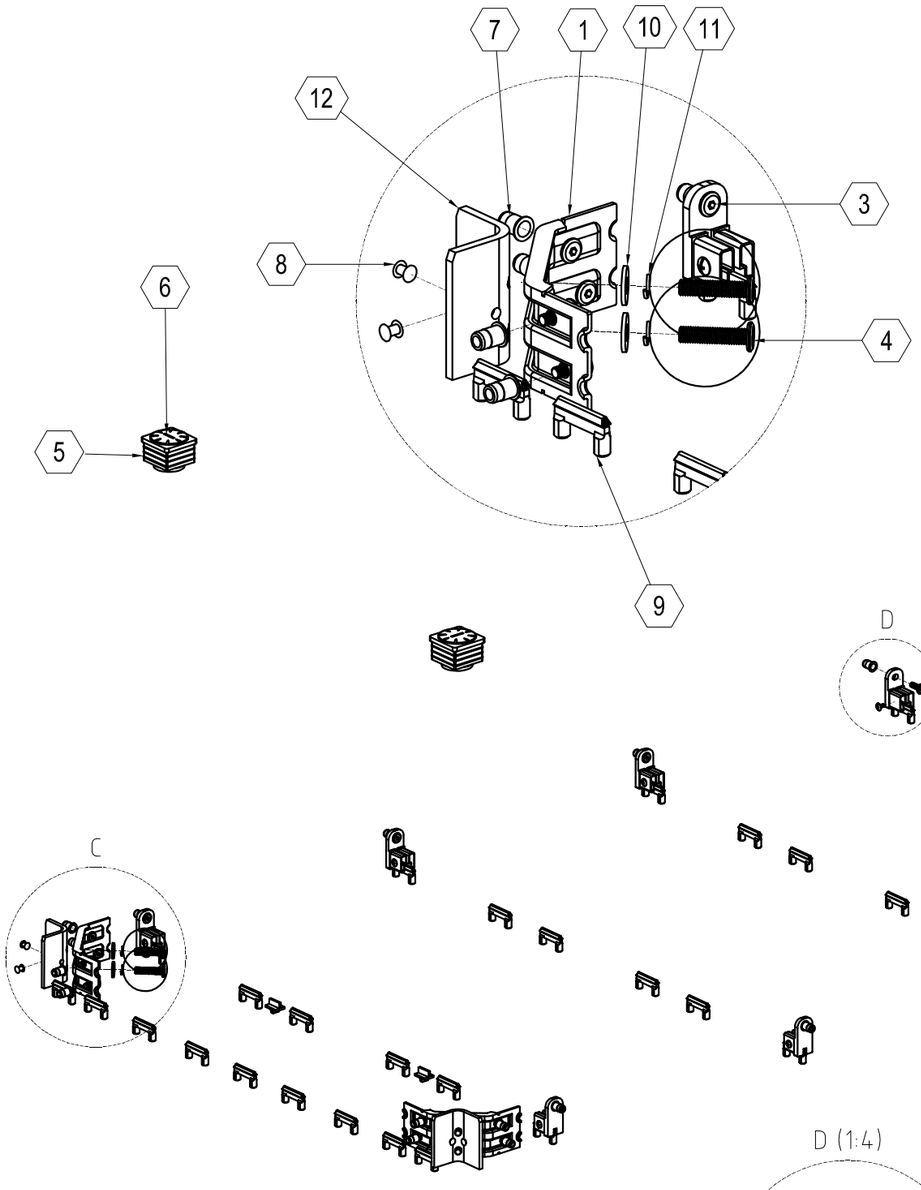


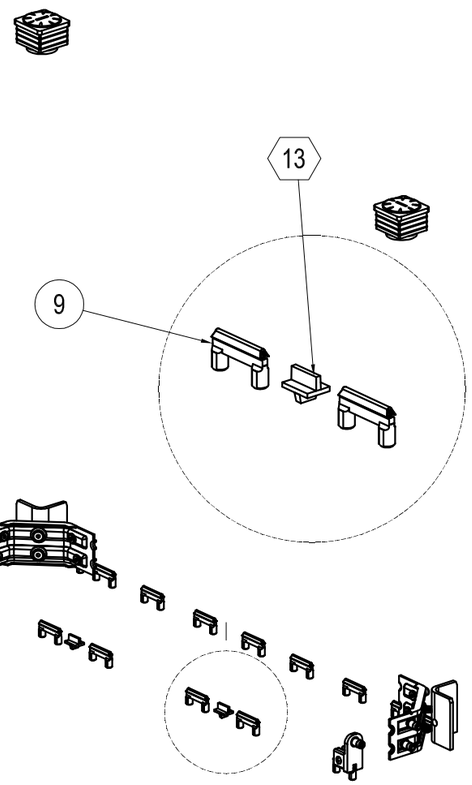








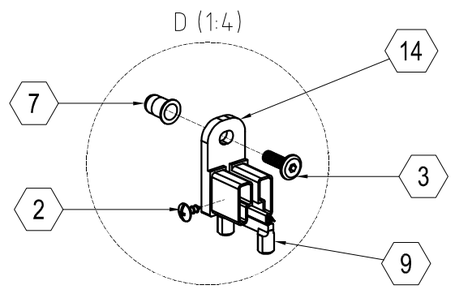


| Ref | Hardware Name | Qty |
|---|---|---|
| 1 | Corner part 152x56x38x(t2.5), ST | 4 |
| 2 | DRW Mushroom Screw 4x11, R-PHL, ST | 10 |
| 3 | F-Bolt 6x18, P-HEX, ST | 26 |
| 4 | F-Bolt 8x35, P-HEX, ST | 8 |
| 5 | Foot 52x52x31, PL | 4 |
| 6 | Foot Ø47.5x40.5, PL | 4 |
| 7 | Insert Rivet 6x16, ST | 26 |
| 8 | Joint Rivet 5x15, AL | 8 |
| 9 | OVVO 40x21.5, PL (V1230PD-10) | 48 |
| 10 | Plain washer 8.5x20x2, ST | 8 |
| 11 | Spring Washers 8.5x12.5x1.5, ST | 8 |
| 12 | Support pat 46x46x70, ST | 4 |
| 13 | Support piece 15x15x20, PL | 4 |
| 14 | Support piece 25x25x50,PL(P715) | 10 |
| 15 | Allen key 4x98 | 2 |

| Rev | NAME | DATE |
|---|---|---|
| 01 | Scancom | 150422 |
| 02 | Scancom | 240822 |
| 03 | | |
| 04 | | |
| 05 | | |
| 06 | | |

ADEO - 135, rue Sadi Carnot
CS 00001 - 59790 RONCHIN
FRANCE

MATERIAU/FINISHING:
DURABOARD

GENERAL TOLERANCES:
LINEAR:
ANGULAR:

TITRE:
DINING TABLE NATERIAL DORA II FIX
DURABOARD 206X89X75 DARK GREY

No. DE PLAN
3276007426441

A3

REVISION

ECHELLE: 1:1 (Scale can be adapted) Dimensions in mm FEUILLE 1 SUR 1