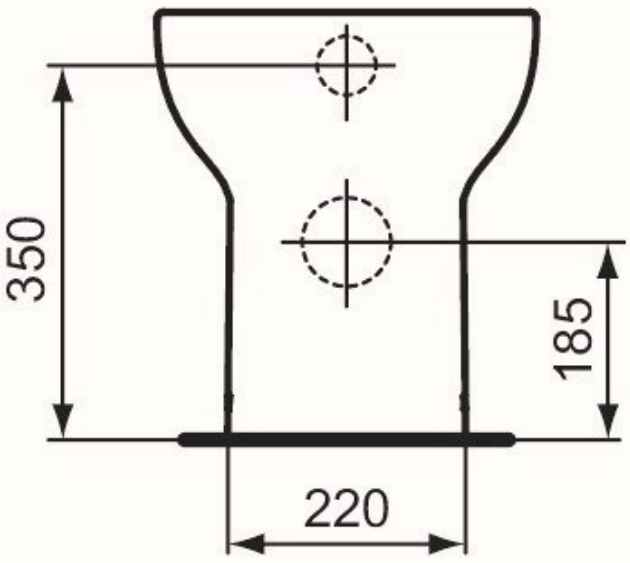

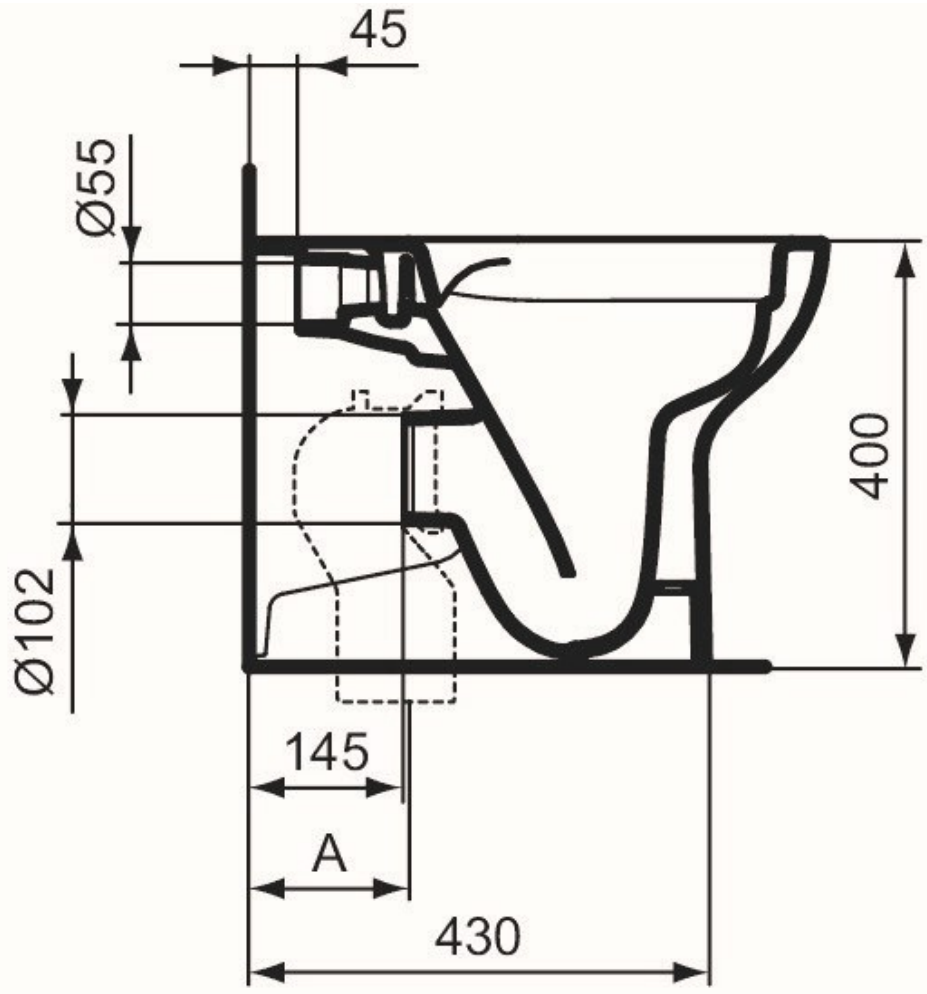

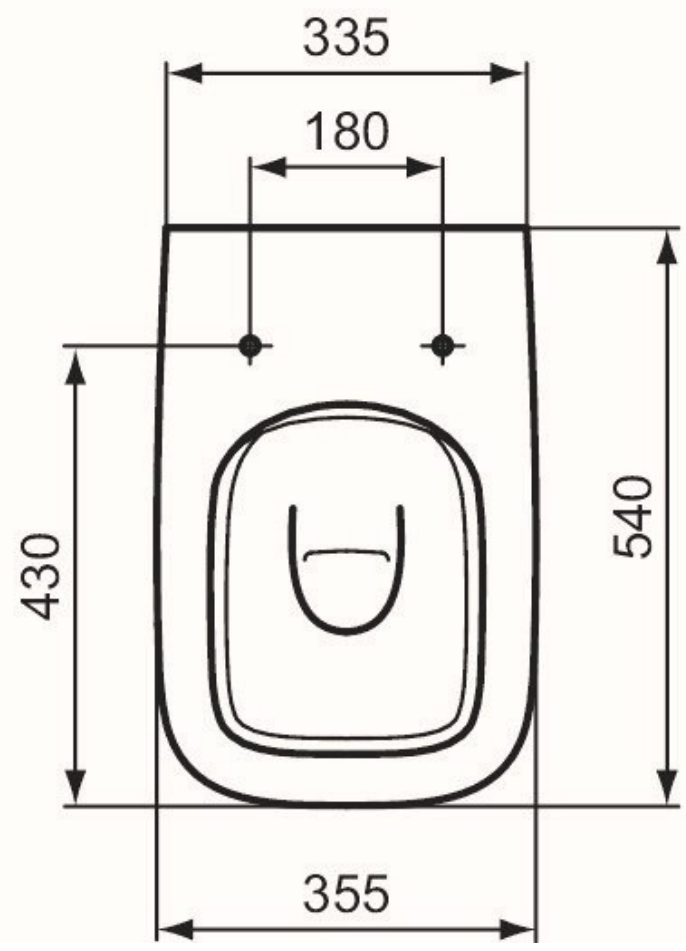

	T002767	J324867	J324867 + T002867	T002667	T682067
A	50 - 90	125 - 140	105 / 160	160 - 190	210