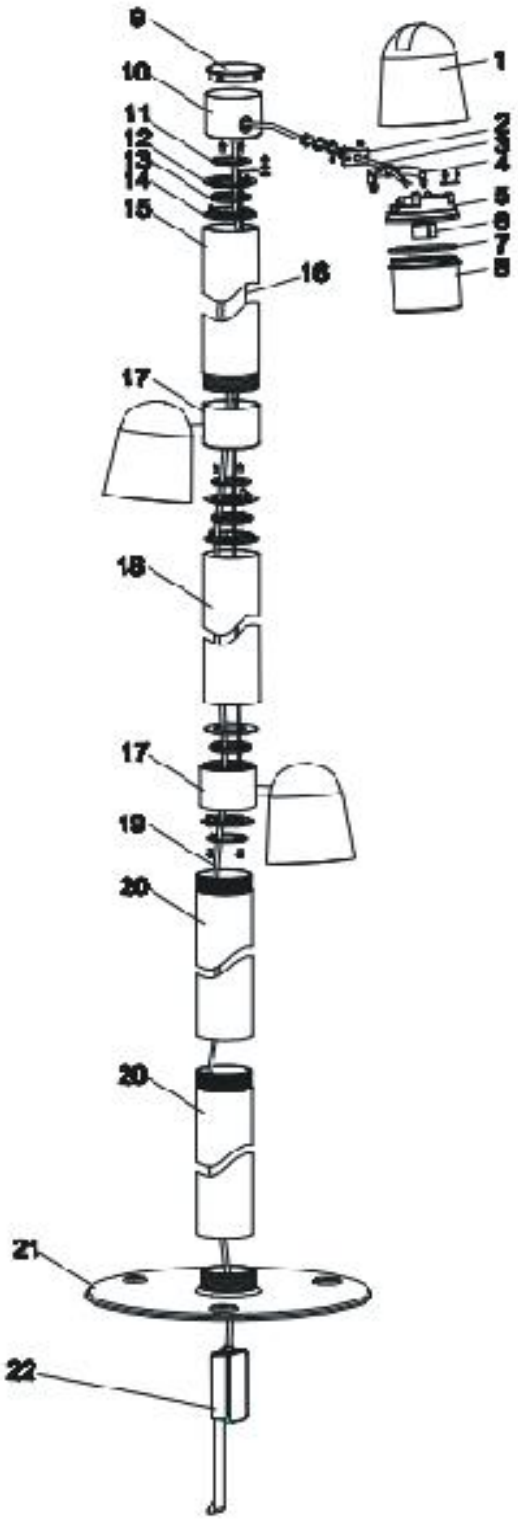

Component requirements

Compo N°	Name	Standard / drawing N°	Assembly Type	Material Type	Materiel Reference	Painting	Color reference	QTY
1	Head Cover			AL			ANTHRACITE RAL	3
2	Head Pivot			copper			ANTHRACITE RAL	3

This document is the property of Adeo Group. Any transmission or reproduction without written agreement is prohibited.

3	Power cable							3
4	Head Bracket						ANTHRACITE RAL	3
5	body			PC			White	3
6	GU10 Lampholder			ceramics			ANTHRACITE RAL	3
7	Seal 01			Rubber				3
8	Diffuser			PC			Clear	3
9	Top cover			nylon			ANTHRACITE RAL	1
10	rotating connector			Aluminium			ANTHRACITE RAL	1
11	Pressure ring							3
12	Rotate bracket01			Aluminium				3
13	Seal 02			Rubber				3
14	Rotate bracket02			Aluminium				3
15	Post 01			Aluminium			ANTHRACITE RAL	1
16	ground cable							1
17	connecter			Aluminium			ANTHRACITE RAL	2
18	Post 02			Aluminium			ANTHRACITE RAL	1
19	Power cable							1
20	Post 03			Aluminium			ANTHRACITE RAL	2
21	Base			Aluminium			ANTHRACITE RAL	1
22	Terminal block box			PC				1

This document is the property of Adeo Group. Any transmission or reproduction without written agreement is prohibited.