# SAV NEO

Indice C

- LINE
- CABINET
- FRAME

2021/02/10

# LINE

SAV 10

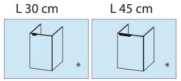


SAV 11

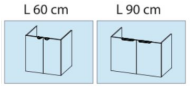


SAV 20

SAV 30

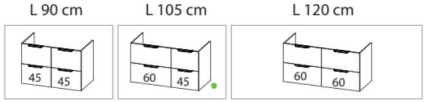


SAV 31

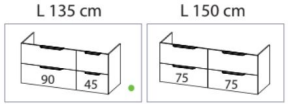


SAV 32

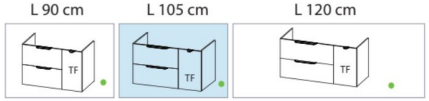


SAV 33

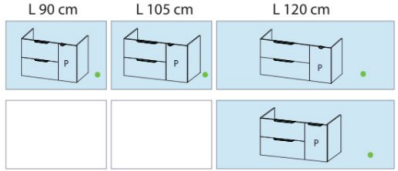


SAV 34

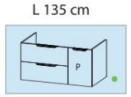


SAV 35

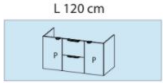


SAV 36

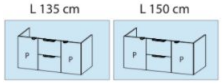


3 tiroirs

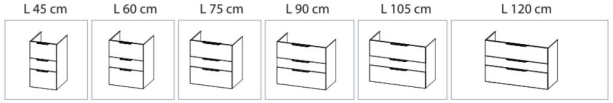


SAV 40

1 tiroir

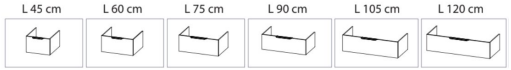


SAV 50

SAV 51

SAV 52

SAV 60

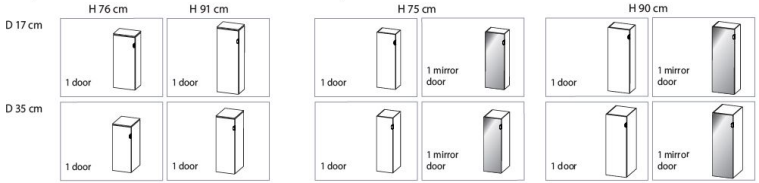


SAV 61

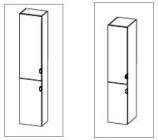


SAV 62

SAV 63

# CABINET

SAV 70

1 porte

L 45 cm

L 60 cm

SAV 71

2 portes

L 90 cm

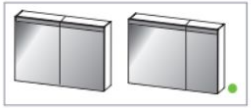

SAV 72

L 105 cm

SAV 73

L 105 cm

L 120 cm

SAV 74

3 portes

L 75 cm

L 90 cm

L 105 cm

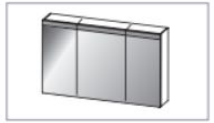

L 120 cm

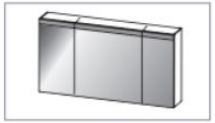

# FRAME

SAV 55

Drawer

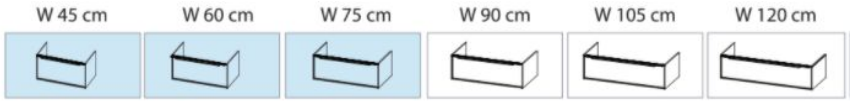


SAV 56

Drawer and door (30)

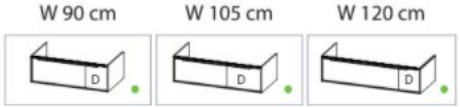


SAV 57

2 drawers

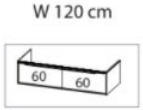


SAV 58

2 drawers

Depth 17cm

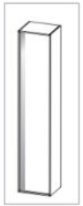

1 door

Depth 35cm

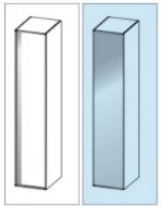

1 door

1 mirror door

SAV 64

Depth 35cm

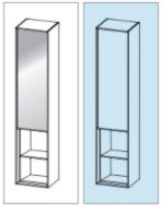

1 mirror door 2 niches

1 door 2 niches

SAV 65

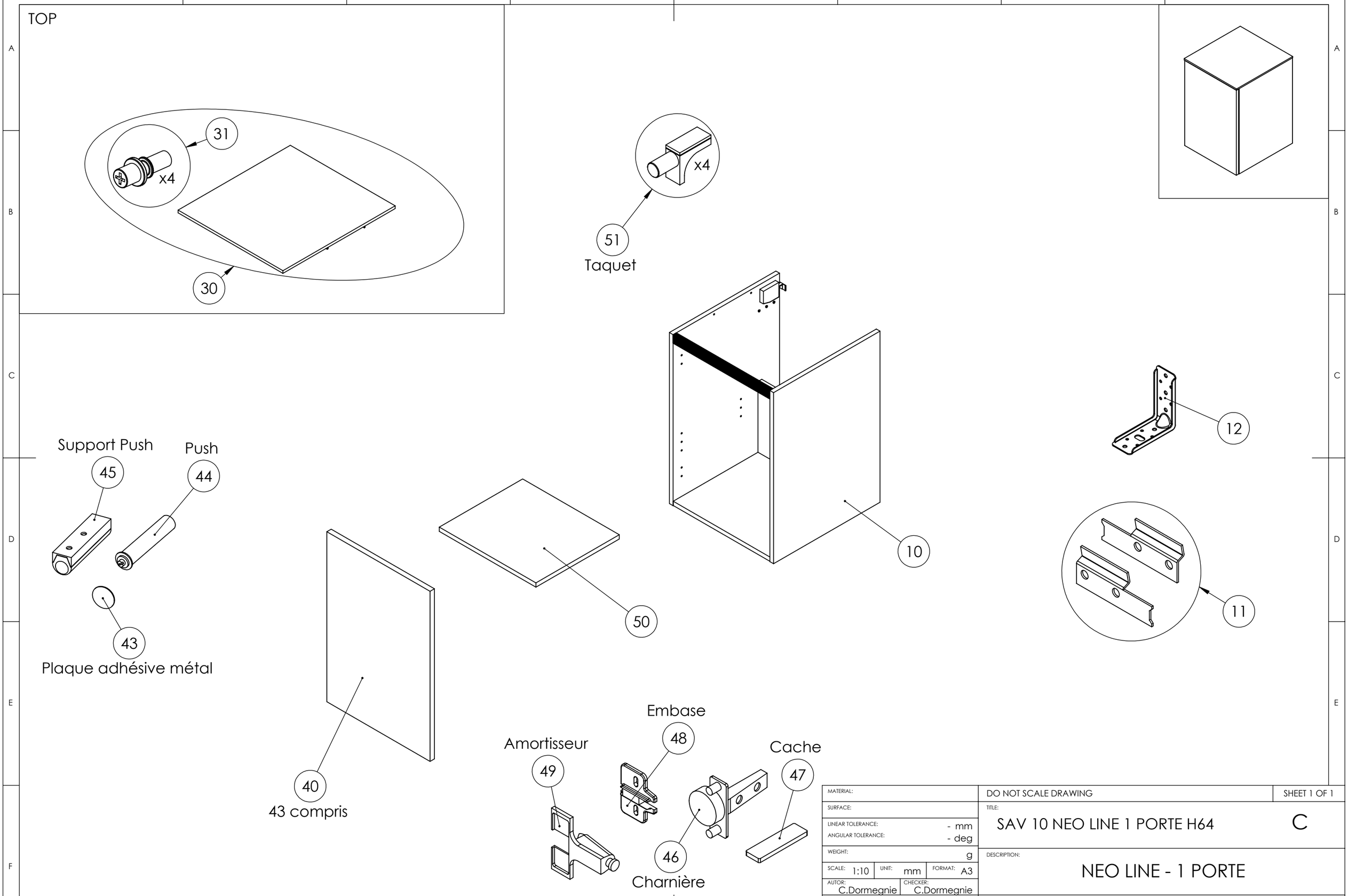


| | | | |
|---|---|---|---|
| MATERIAL: | | DO NOT SCALE DRAWING | SHEET 1 OF 1 |
| SURFACE: | | TITLE: SAV 10 NEO LINE 1 PORTE H64 | C |
| LINEAR TOLERANCE: - mm<br>ANGULAR TOLERANCE: - deg | | | |
| WEIGHT: g | | DESCRIPTION: NEO LINE - 1 PORTE | |
| SCALE: 1:10 | UNIT: mm / FORMAT: A3 | | |
| AUTOR: C.Dormegnie | CHECKER: C.Dormegnie | | |
| STATUS: APPROVED | | | |
| DATE: 10/11/2020 | | | |

This drawing is the exclusive property of **ADEO**.
Any reproduction in part or whole without the written permition of **ADEO** is prohibited.

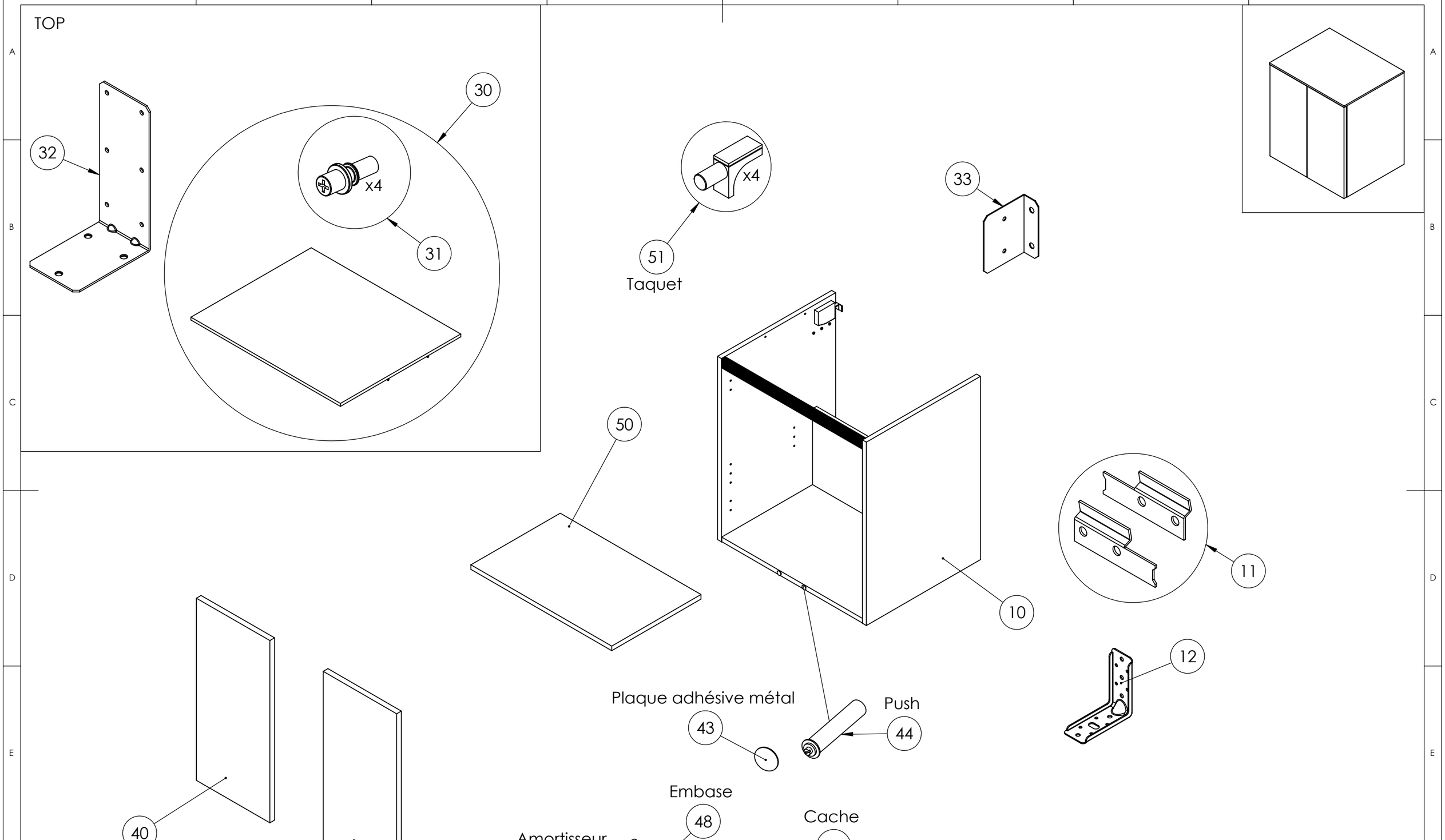


| | | |
|---|---|---|
| MATERIAL: | DO NOT SCALE DRAWING | SHEET 1 OF 1 |
| SURFACE: | TITLE: SAV 11 NEO LINE 2 PORTES H64 | D |
| LINEAR TOLERANCE: - mm<br>ANGULAR TOLERANCE: - deg | | |
| WEIGHT: g | DESCRIPTION: NEO LINE - 2 PORTES | |
| SCALE: 1:10 UNIT: mm FORMAT: A3 | | |
| AUTOR: C.Dormegnie CHECKER: C.Dormegnie | | |
| STATUS: APPROVED | This drawing is the exclusive property of **ADEO**. Any reproduction in part or whole without the written permition of **ADEO** is prohibited. | |
| DATE: 10/11/2020 | | |

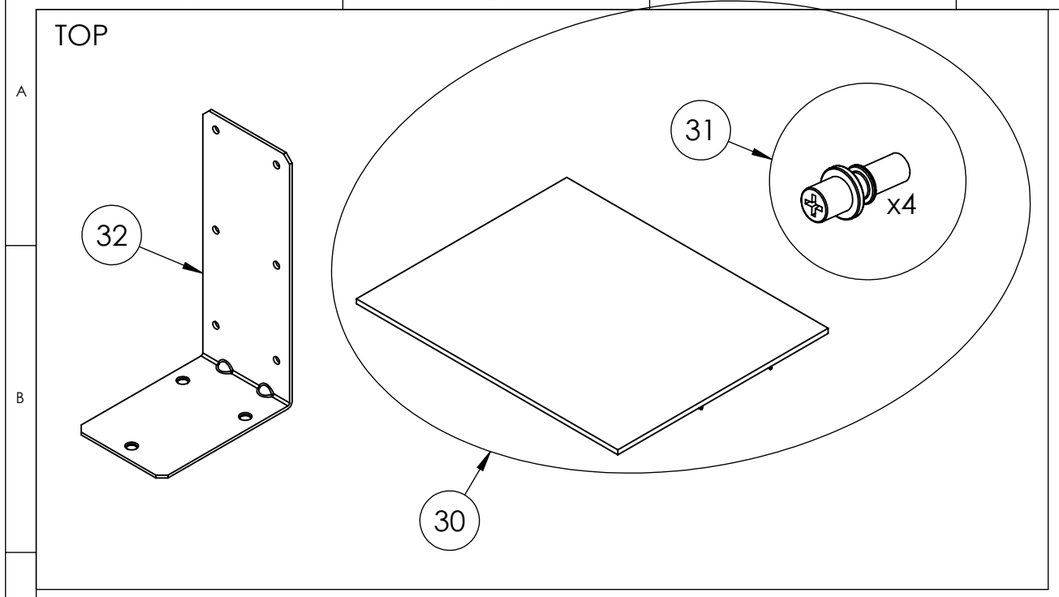


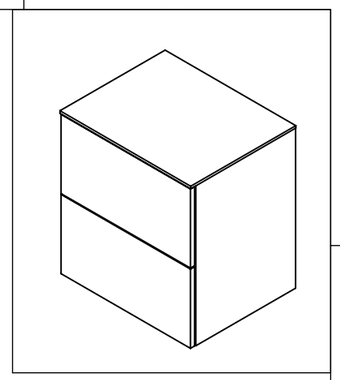

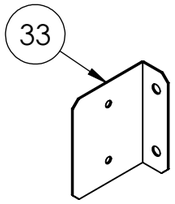


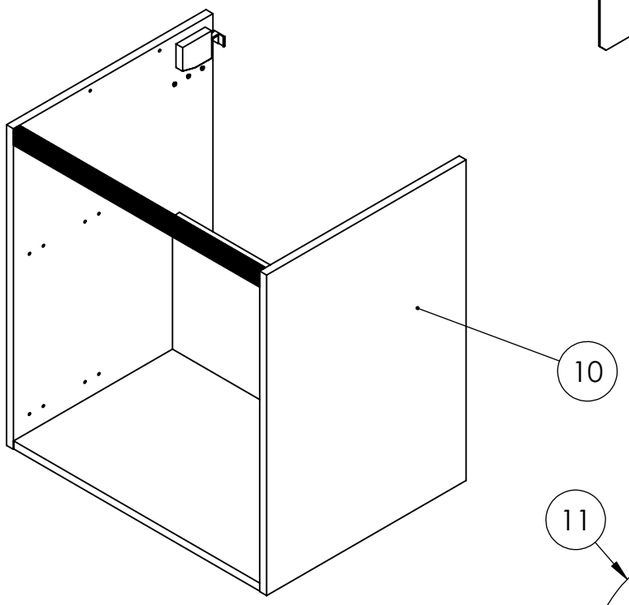


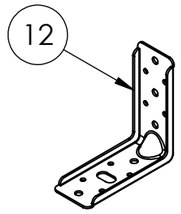


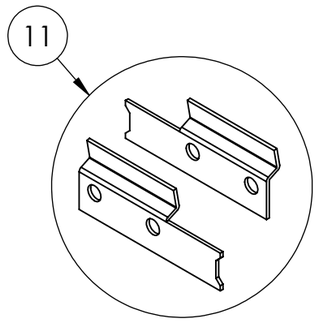


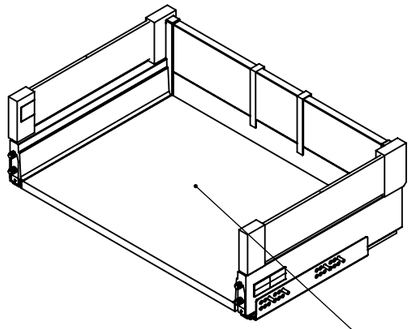

PAGE 2

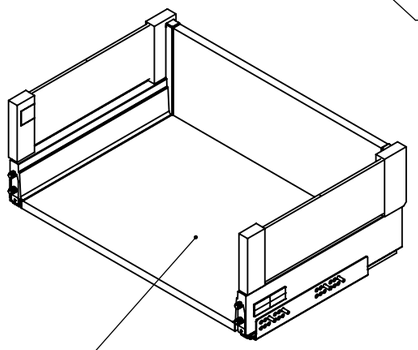

PAGE 3

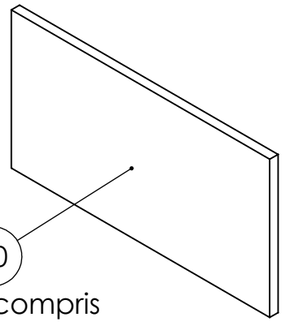


28 et 29 compris

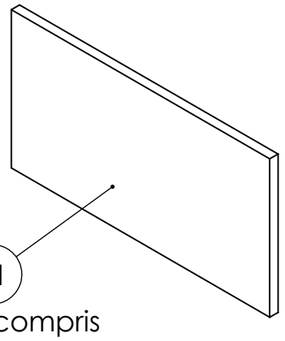


28 et 29 compris

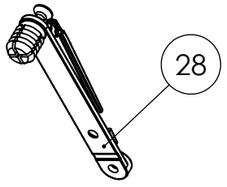


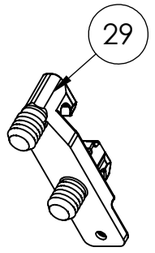


| | | | |
|---|---|---|---|
| MATERIAL: | | DO NOT SCALE DRAWING | SHEET 1 OF 3 |
| SURFACE: | | TITLE: SAV 20 NEO LINE 2 TIROIRS H64 | B |
| LINEAR TOLERANCE: - mm<br>ANGULAR TOLERANCE: - deg | | | |
| WEIGHT: g | | DESCRIPTION: NEO LINE - 2 TIROIRS | |
| SCALE: 1:10 | UNIT: mm / FORMAT: A3 | | |
| AUTOR: C.Dormegnie | CHECKER: C.Dormegnie | | |
| STATUS: APPROVED | | | |
| DATE: 26/10/2020 | | | |

This drawing is the exclusive property of **ADEO**.
Any reproduction in part or whole without the written permition of **ADEO** is prohibited.

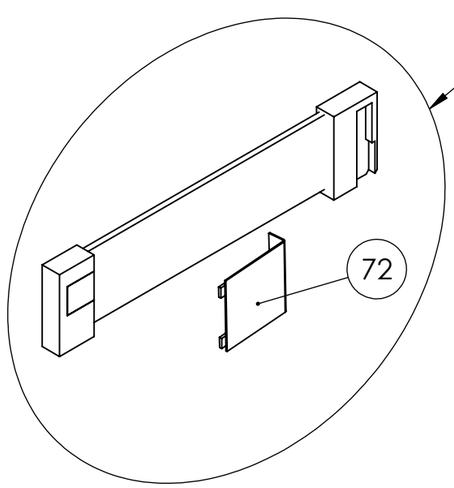


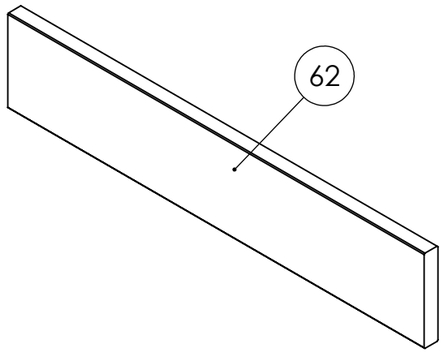


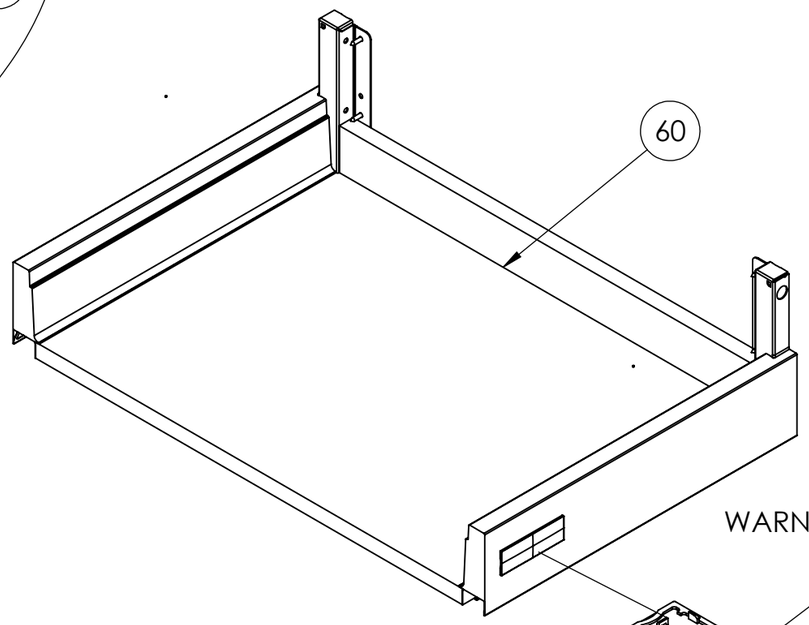


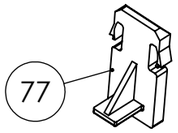


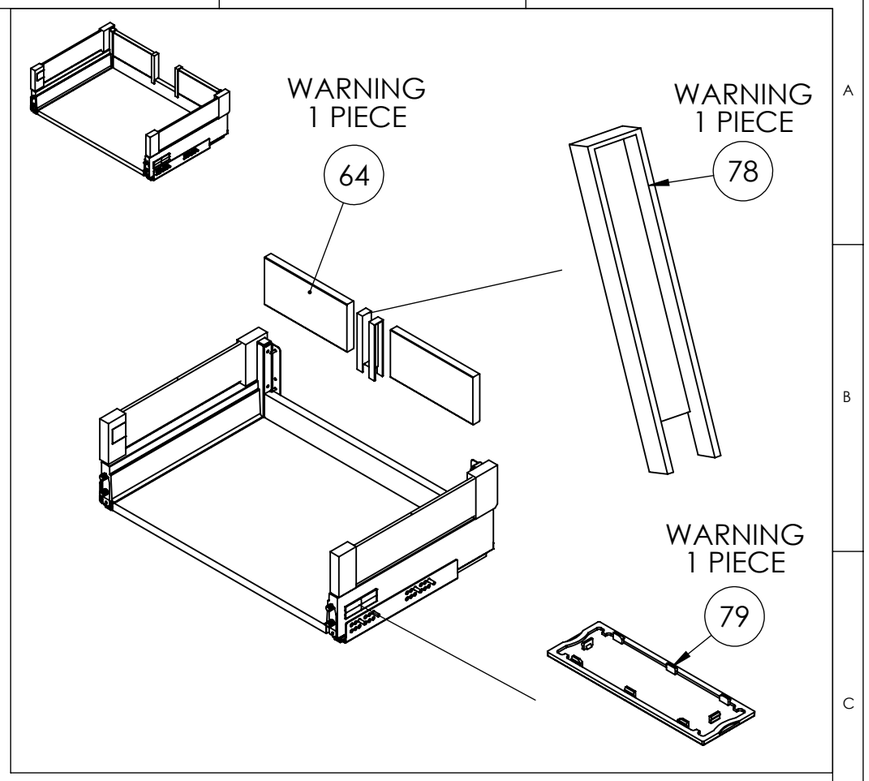


WARNING 1 PIECE




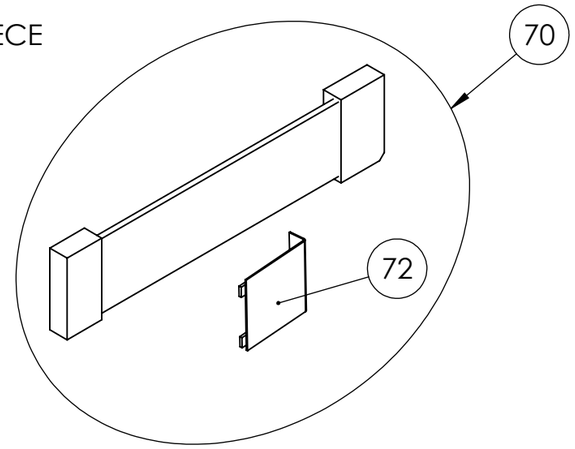


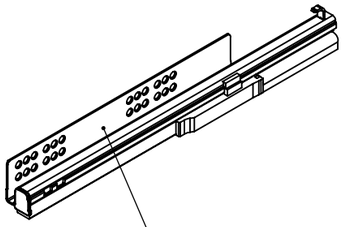


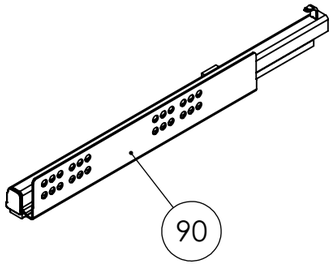


| | | |
|---|---|---|
| MATERIAL: | DO NOT SCALE DRAWING | SHEET 2 OF 3 |
| SURFACE: | TITLE: SAV 20 NEO LINE 2 TIROIRS H64 | B |
| LINEAR TOLERANCE: - mm<br>ANGULAR TOLERANCE: - deg | | |
| WEIGHT: g | DESCRIPTION: NEO TIROIR HAUT | |
| SCALE: 1:10 UNIT: mm FORMAT: A3 | | |
| AUTOR: C.Dormegnie CHECKER: C.Dormegnie | | |
| STATUS: APPROVED | This drawing is the exclusive property of **ADEO**. Any reproduction in part or whole without the written permition of **ADEO** is prohibited. | |
| DATE: 26/10/2020 | | |

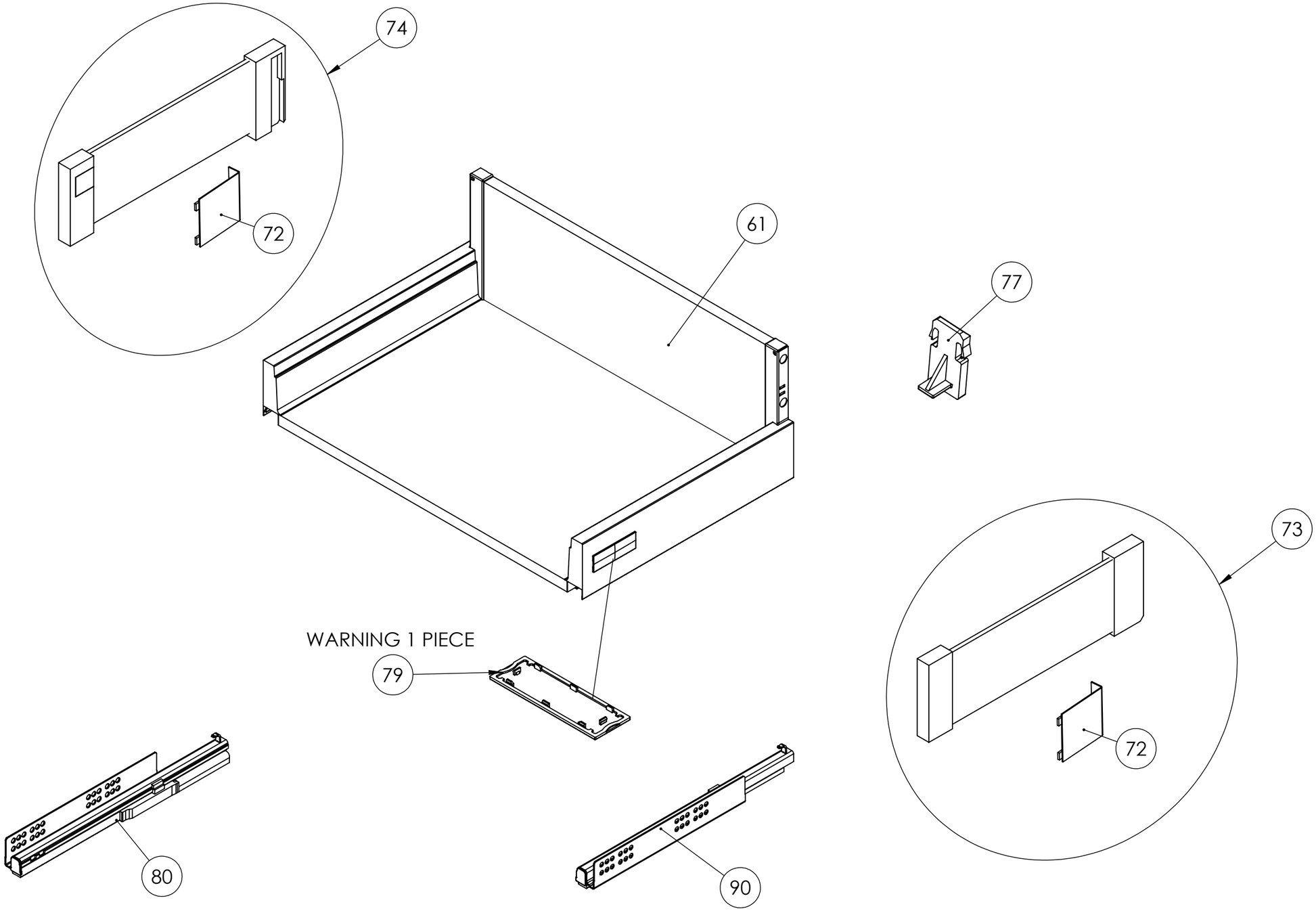


| | | | |
|---|---|---|---|
| MATERIAL: | | DO NOT SCALE DRAWING | SHEET 3 OF 3 |
| SURFACE: | | TITLE: SAV 20 NEO LINE 2 TIROIRS H64 | B |
| LINEAR TOLERANCE: - mm<br>ANGULAR TOLERANCE: - deg | | | |
| WEIGHT: g | | DESCRIPTION: NEO TIROIR BAS | |
| SCALE: 1:10 | UNIT: mm / FORMAT: A3 | | |
| AUTOR: C.Dormegnie | CHECKER: C.Dormegnie | | |
| STATUS: APPROVED | | This drawing is the exclusive property of **ADEO**. Any reproduction in part or whole without the written permition of **ADEO** is prohibited. | |
| DATE: 26/10/2020 | | | |

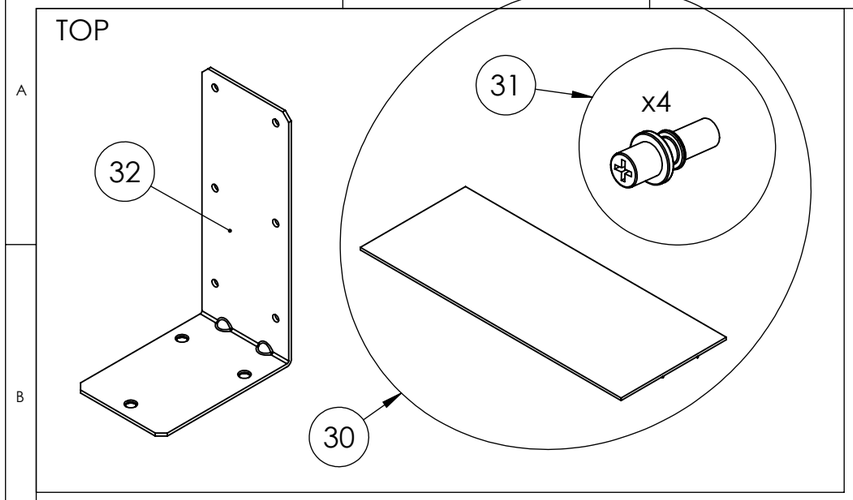


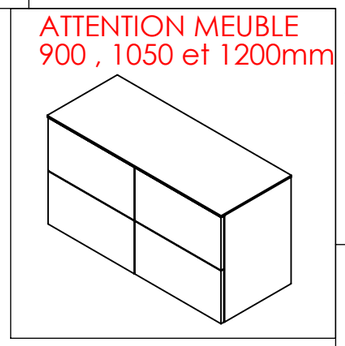


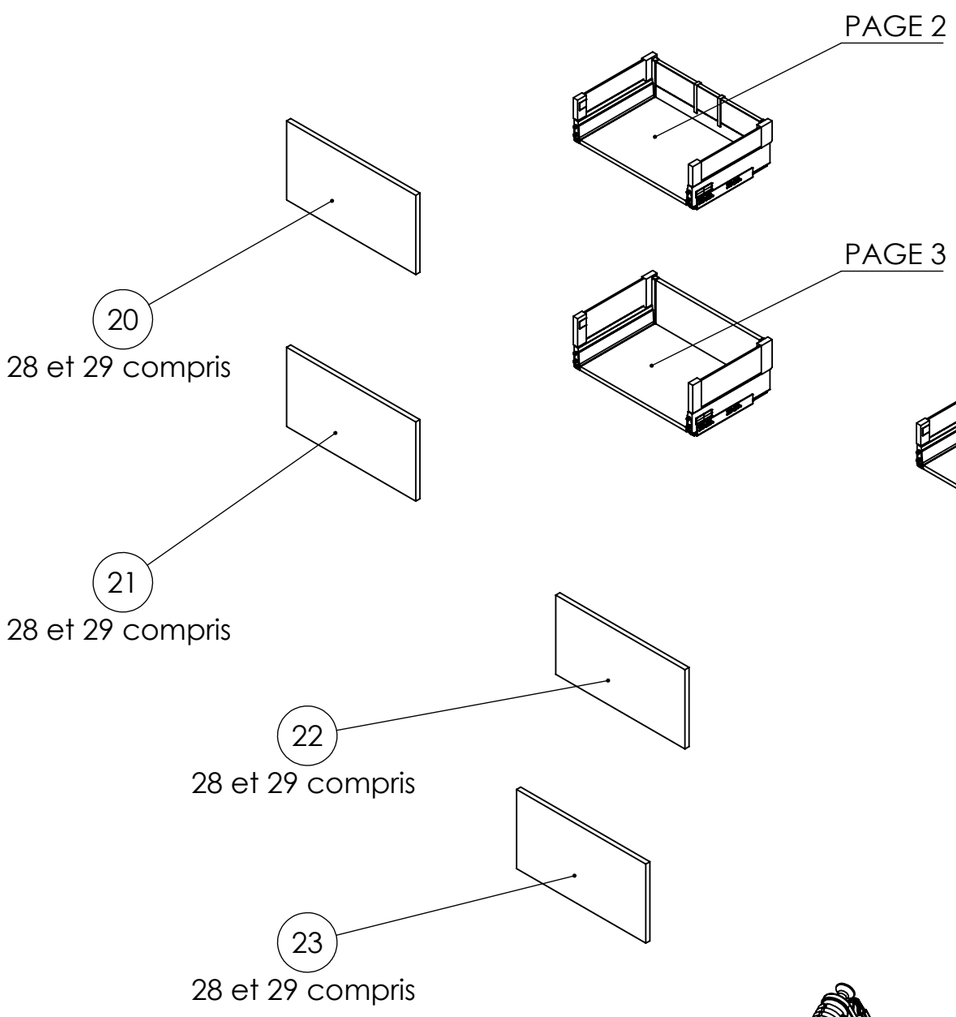


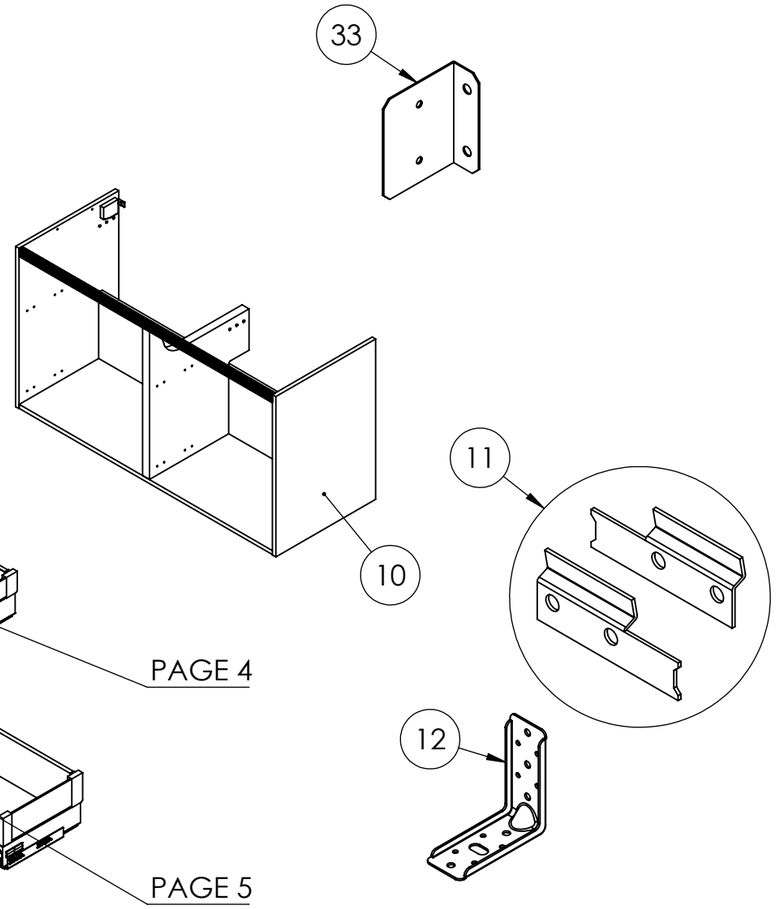


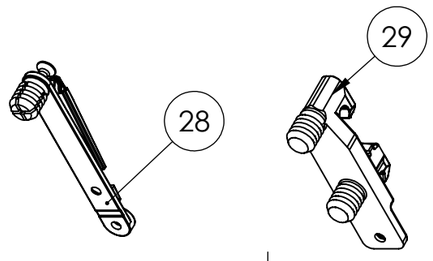


| | | | |
|---|---|---|---|
| MATERIAL: Träger 50 | | DO NOT SCALE DRAWING | SHEET 1 OF 5 |
| SURFACE: | | TITLE: SAV 30 NEO LINE 4 TIROIRS | C |
| LINEAR TOLERANCE: - mm<br>ANGULAR TOLERANCE: - deg | | | |
| WEIGHT: g | | DESCRIPTION: NEO LINE - 4 TIROIRS 900, 1050 ET 1200mm | |
| SCALE: 1:10 | UNIT: mm / FORMAT: A3 | | |
| AUTOR: C.Dormegnie | CHECKER: C.Dormegnie | | |
| STATUS: APPROVED | | This drawing is the exclusive property of **ADEO**. Any reproduction in part or whole without the written permition of **ADEO** is prohibited. | |
| DATE: 17/11/2020 | | | |

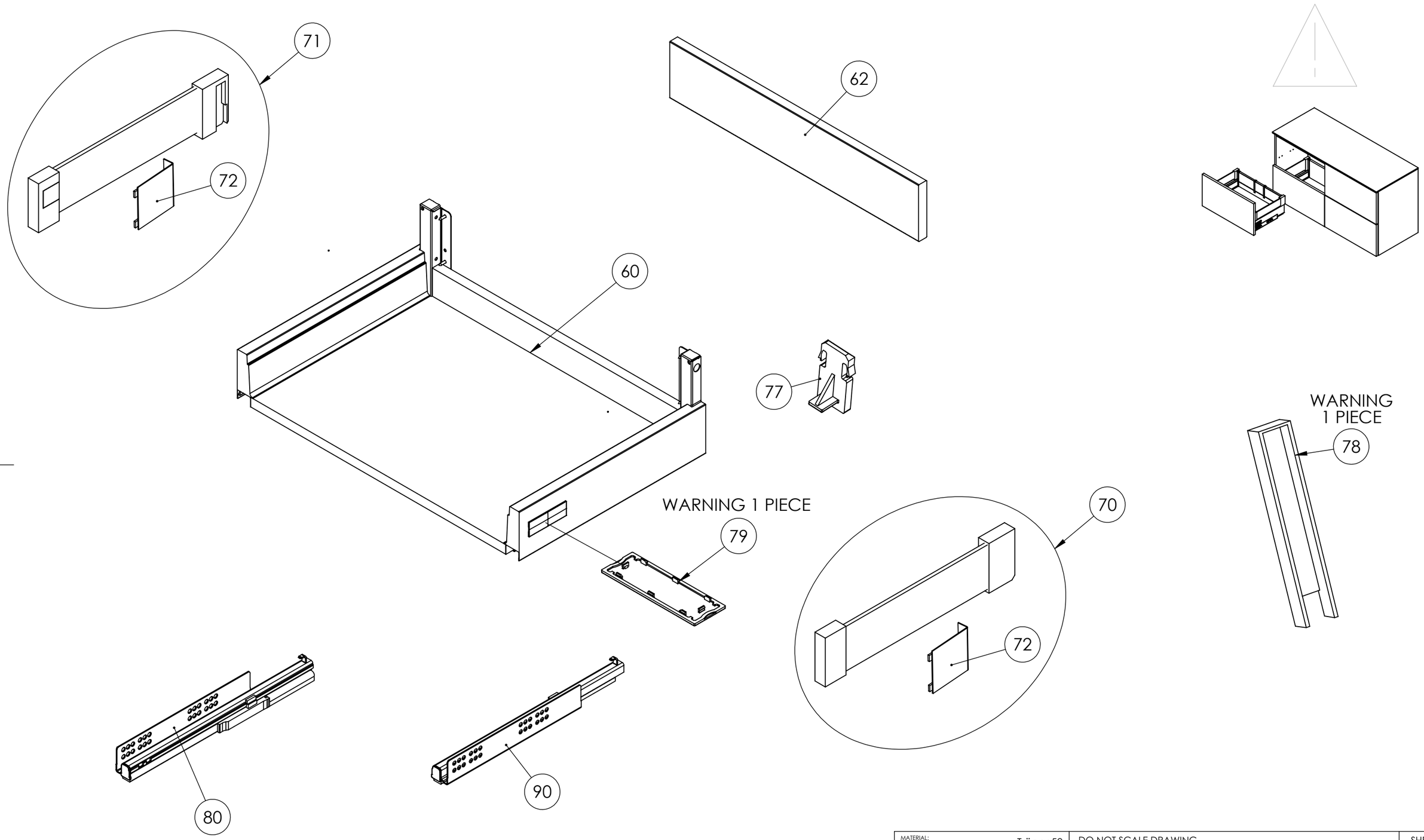


| | | | |
|---|---|---|---|
| MATERIAL: Träger 50 | | DO NOT SCALE DRAWING | SHEET 2 OF 5 |
| SURFACE: | | TITLE: SAV 30 NEO LINE 4 TIROIRS | C |
| LINEAR TOLERANCE: - mm<br>ANGULAR TOLERANCE: - deg | | | |
| WEIGHT: g | | DESCRIPTION: NEO TIROIR HAUT GAUCHE | |
| SCALE: 1:10 | UNIT: mm / FORMAT: A3 | | |
| AUTOR: C.Dormegnie | CHECKER: C.Dormegnie | | |
| STATUS: APPROVED | | | |
| DATE: 17/11/2020 | | | |

This drawing is the exclusive property of **ADEO**.
Any reproduction in part or whole without the written permition of **ADEO** is prohibited.

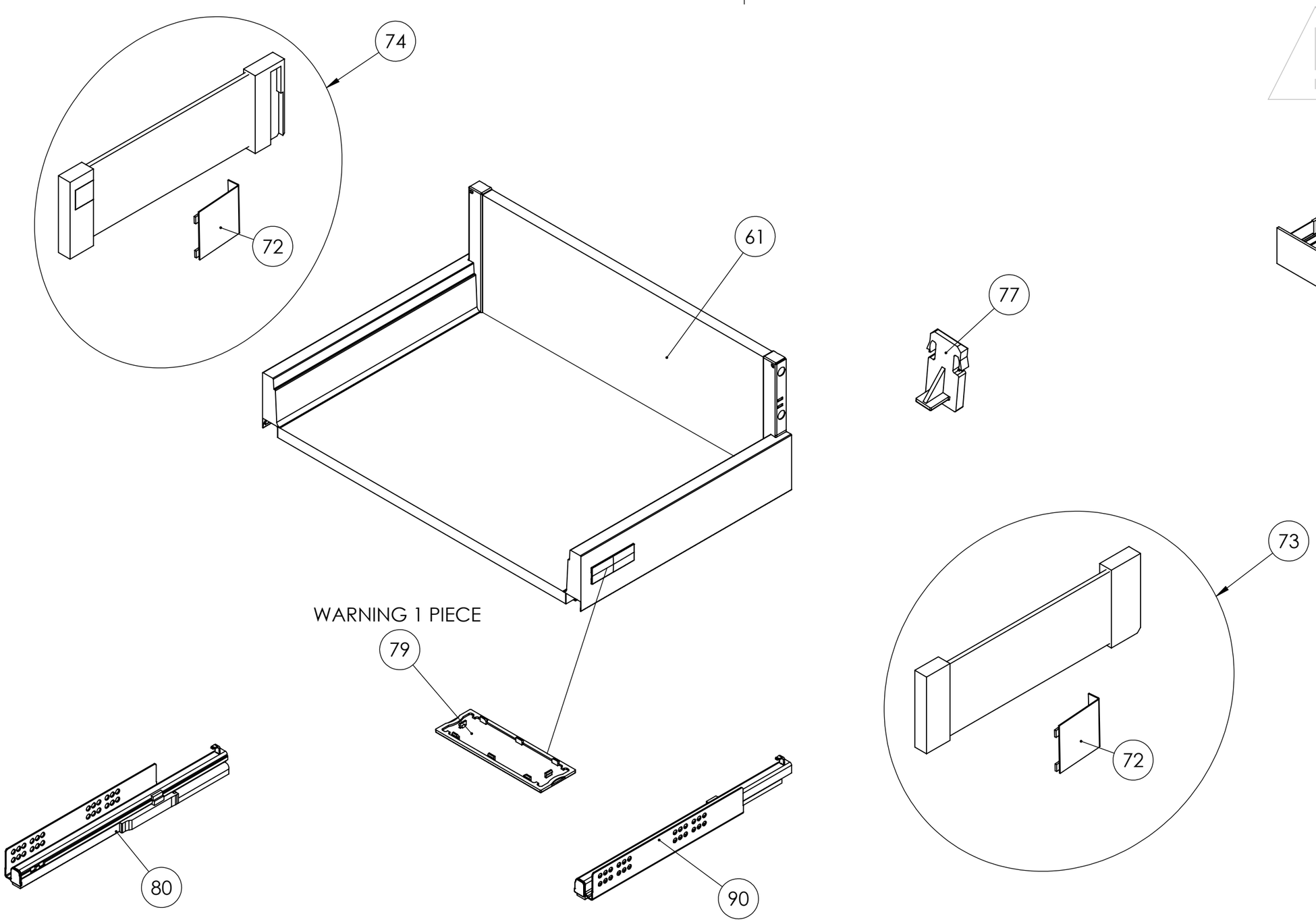


| | | | |
|---|---|---|---|
| MATERIAL: | Träger 50 | DO NOT SCALE DRAWING | SHEET 3 OF 5 |
| SURFACE: | | TITLE: SAV 30 NEO LINE 4 TIROIRS | C |
| LINEAR TOLERANCE: - mm<br>ANGULAR TOLERANCE: - deg | | | |
| WEIGHT: g | | DESCRIPTION: NEO TIROIR BAS GAUCHE | |
| SCALE: 1:10 | UNIT: mm / FORMAT: A3 | | |
| AUTOR: C.Dormegnie | CHECKER: C.Dormegnie | | |
| STATUS: APPROVED | | | |
| DATE: 17/11/2020 | | | |

This drawing is the exclusive property of **ADEO**.
Any reproduction in part or whole without the written permition of **ADEO** is prohibited.

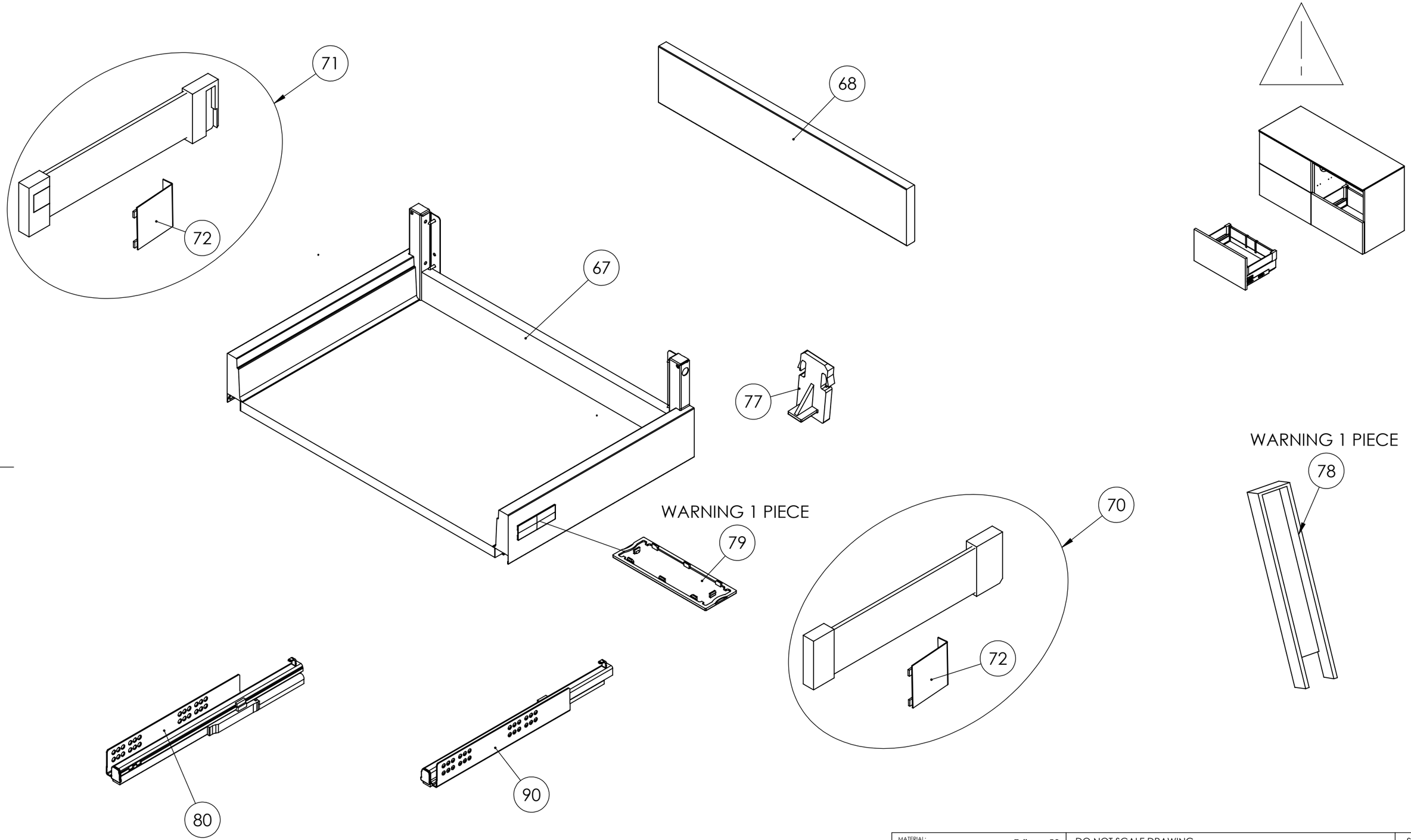


| | | | |
|---|---|---|---|
| MATERIAL: Träger 50 | DO NOT SCALE DRAWING | | SHEET 4 OF 5 |
| SURFACE: | TITLE: SAV 30 NEO LINE 4 TIROIRS | | C |
| LINEAR TOLERANCE: - mm<br>ANGULAR TOLERANCE: - deg | | | |
| WEIGHT: g | DESCRIPTION: NEO TIROIR HAUT DROIT | | |
| SCALE: 1:10 / UNIT: mm / FORMAT: A3 | | | |
| AUTOR: C.Dormegnie / CHECKER: C.Dormegnie | | | |
| STATUS: APPROVED | This drawing is the exclusive property of **ADEO**. Any reproduction in part or whole without the written permition of **ADEO** is prohibited. | | |
| DATE: 17/11/2020 | | | |

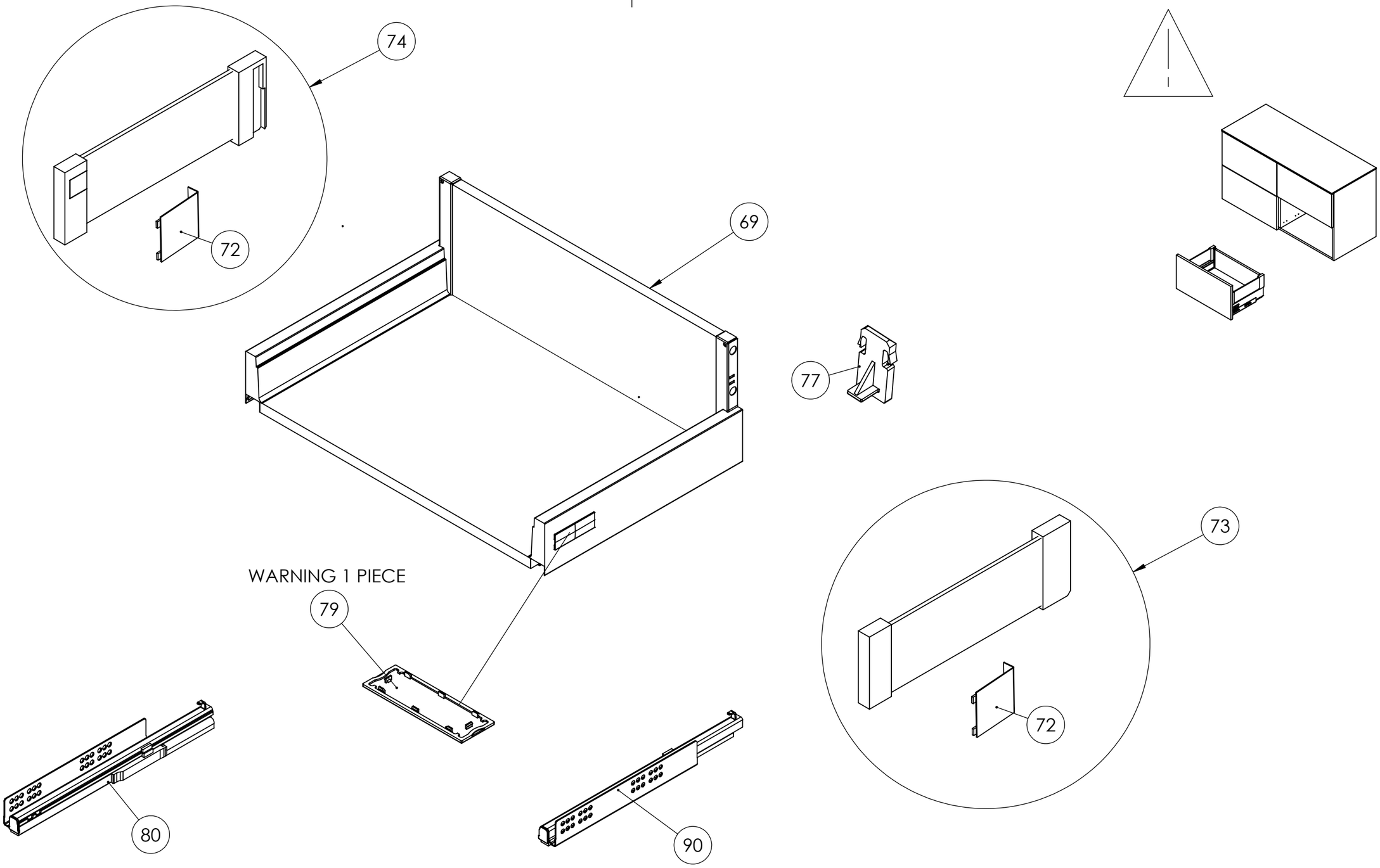


| | | | |
|---|---|---|---|
| MATERIAL: Träger 50 | | DO NOT SCALE DRAWING | SHEET 5 OF 5 |
| SURFACE: | | TITLE: SAV 30 NEO LINE 4 TIROIRS | C |
| LINEAR TOLERANCE: - mm<br>ANGULAR TOLERANCE: - deg | | | |
| WEIGHT: g | | DESCRIPTION: NEO TIROIR BAS DROIT | |
| SCALE: 1:10 | UNIT: mm / FORMAT: A3 | | |
| AUTOR: C.Dormegnie | CHECKER: C.Dormegnie | | |
| STATUS: APPROVED | | | |
| DATE: 17/11/2020 | | | |

This drawing is the exclusive property of **ADEO**.
Any reproduction in part or whole without the written permition of **ADEO** is prohibited.

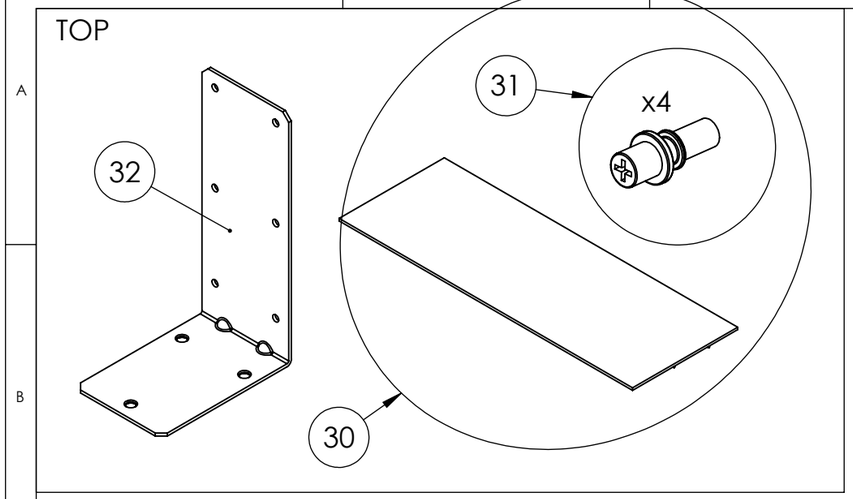


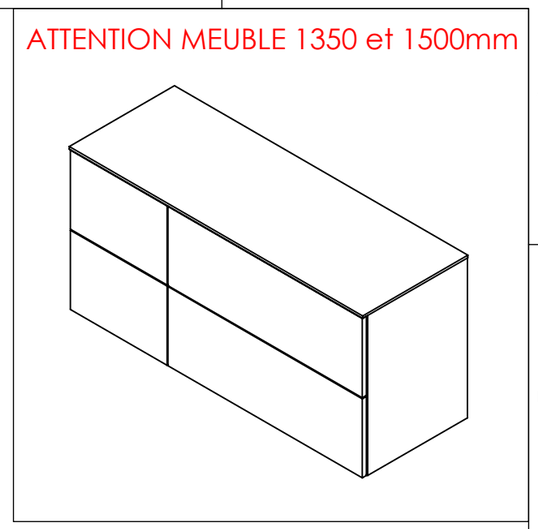


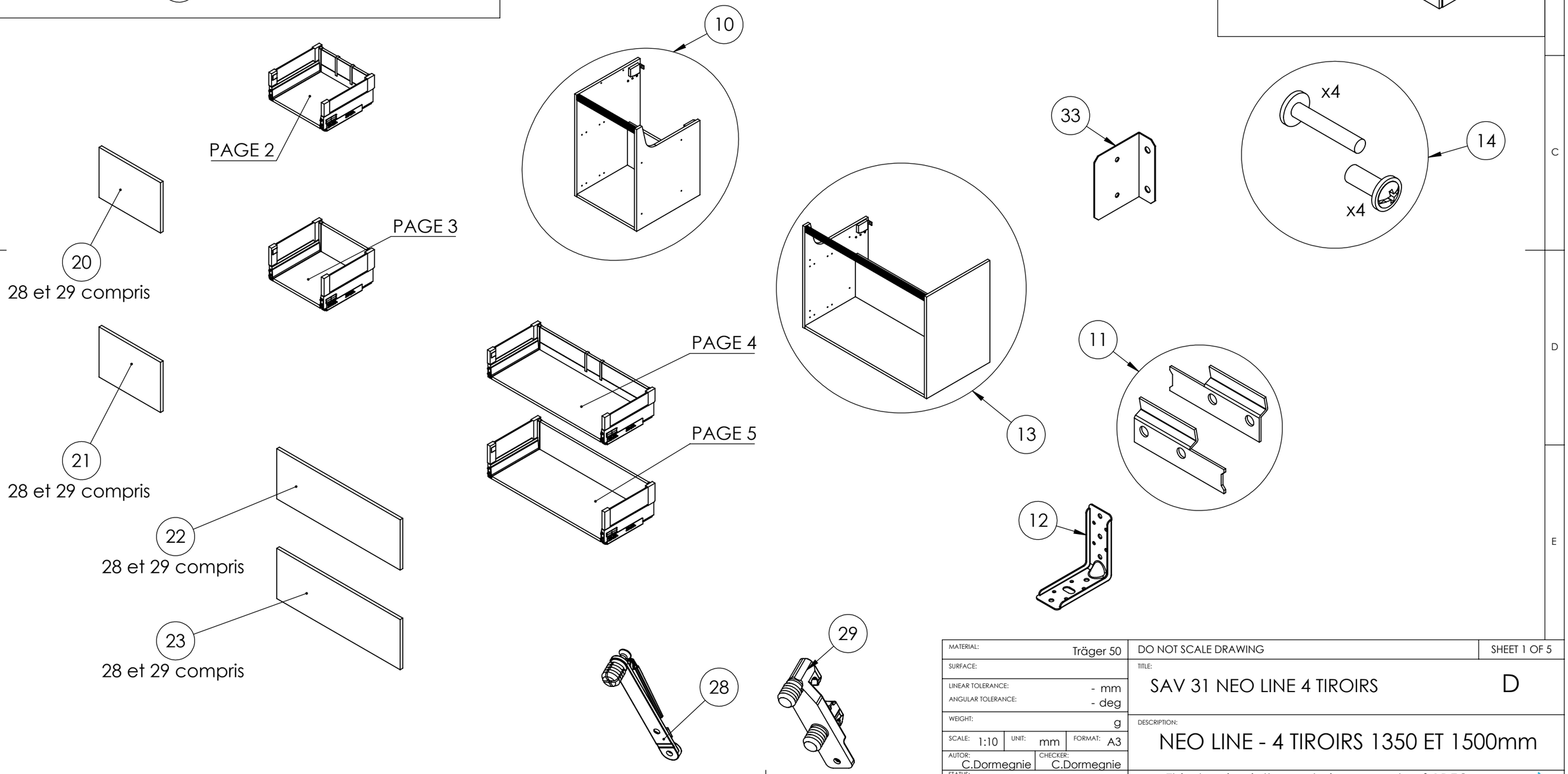


| | | | |
|---|---|---|---|
| MATERIAL: Träger 50 | DO NOT SCALE DRAWING | | SHEET 1 OF 5 |
| SURFACE: | TITLE: SAV 31 NEO LINE 4 TIROIRS | | D |
| LINEAR TOLERANCE: - mm<br>ANGULAR TOLERANCE: - deg | | | |
| WEIGHT: g | DESCRIPTION: NEO LINE - 4 TIROIRS 1350 ET 1500mm | | |
| SCALE: 1:10 / UNIT: mm / FORMAT: A3 | | | |
| AUTOR: C.Dormegnie / CHECKER: C.Dormegnie | | | |
| STATUS: APPROVED | This drawing is the exclusive property of **ADEO**. Any reproduction in part or whole without the written permition of **ADEO** is prohibited. | | |
| DATE: 27/10/2020 | | | |

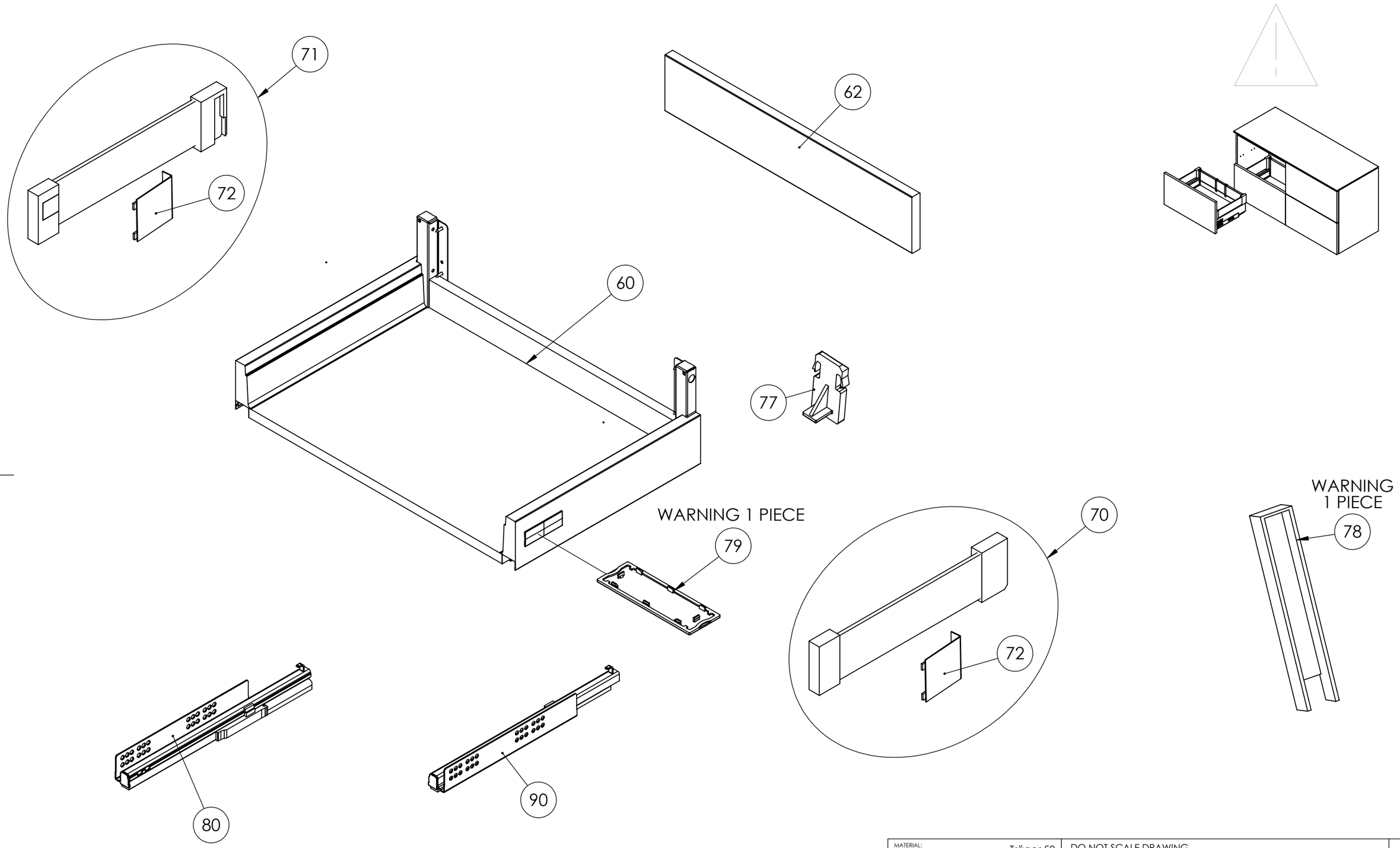


| | | | |
|---|---|---|---|
| MATERIAL: Träger 50 | | DO NOT SCALE DRAWING | SHEET 2 OF 5 |
| SURFACE: | | TITLE: SAV 31 NEO LINE 4 TIROIRS | D |
| LINEAR TOLERANCE: - mm<br>ANGULAR TOLERANCE: - deg | | | |
| WEIGHT: g | | DESCRIPTION: NEO TIROIR HAUT GAUCHE | |
| SCALE: 1:10 | UNIT: mm / FORMAT: A3 | | |
| AUTOR: C.Dormegnie | CHECKER: C.Dormegnie | | |
| STATUS: APPROVED | | This drawing is the exclusive property of **ADEO**. Any reproduction in part or whole without the written permition of **ADEO** is prohibited. | |
| DATE: 27/10/2020 | | | |

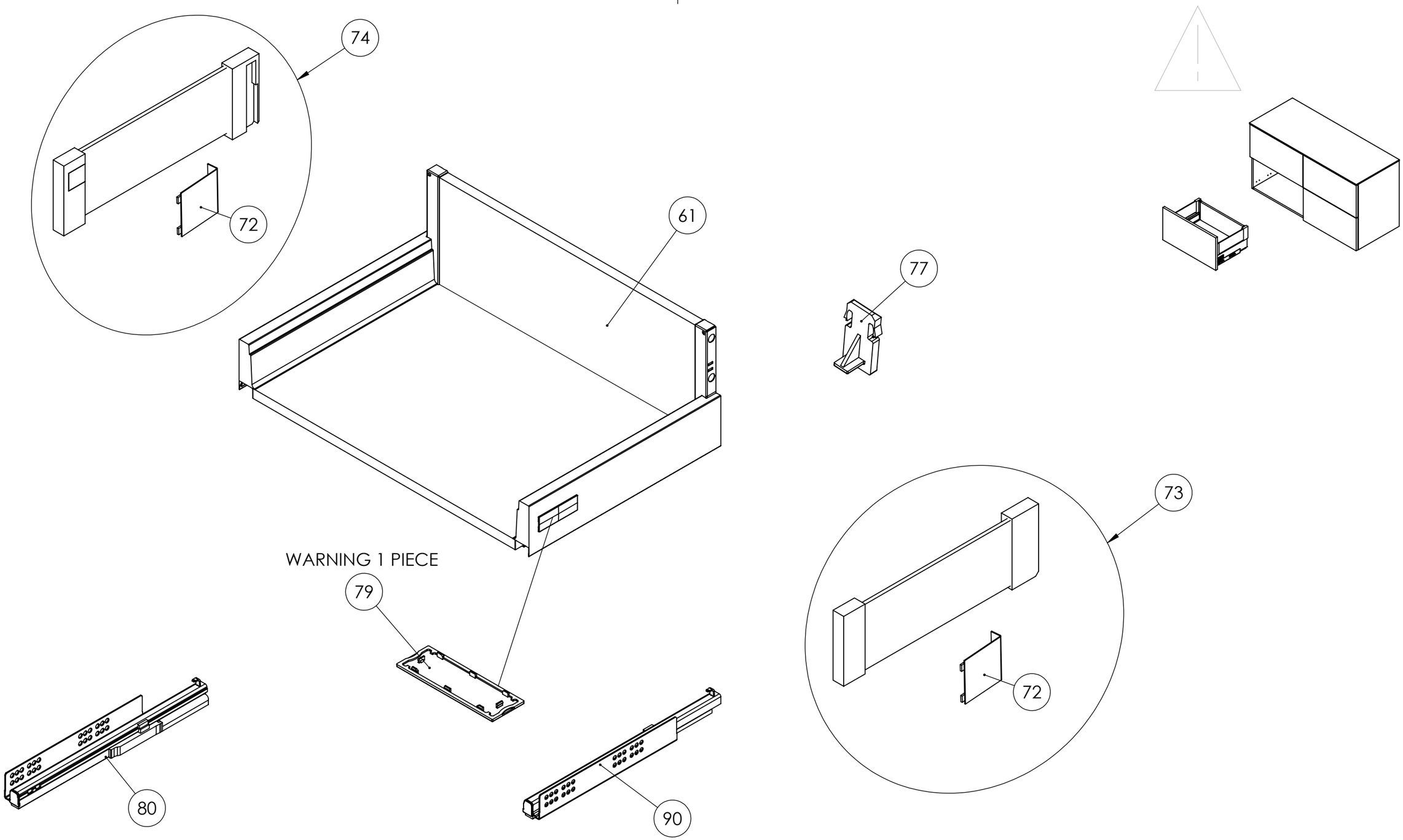


| | | | |
|---|---|---|---|
| MATERIAL: | Träger 50 | DO NOT SCALE DRAWING | SHEET 3 OF 5 |
| SURFACE: | | TITLE: SAV 31 NEO LINE 4 TIROIRS | D |
| LINEAR TOLERANCE: - mm<br>ANGULAR TOLERANCE: - deg | | | |
| WEIGHT: g | | DESCRIPTION: NEO TIROIR BAS GAUCHE | |
| SCALE: 1:10 | UNIT: mm / FORMAT: A3 | | |
| AUTOR: C.Dormegnie | CHECKER: C.Dormegnie | | |
| STATUS: APPROVED | | This drawing is the exclusive property of **ADEO**. Any reproduction in part or whole without the written permition of **ADEO** is prohibited. | |
| DATE: 27/10/2020 | | | |

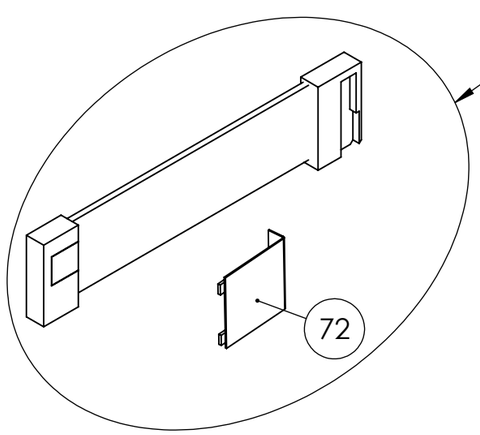


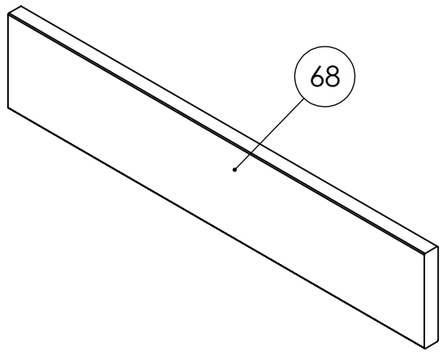


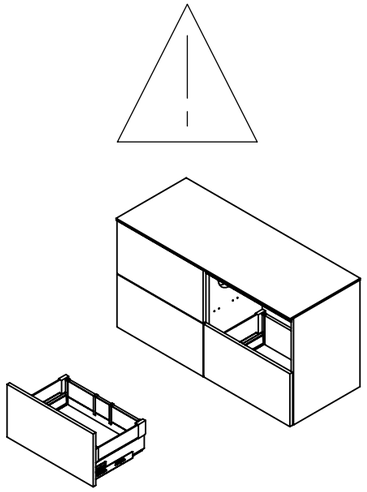

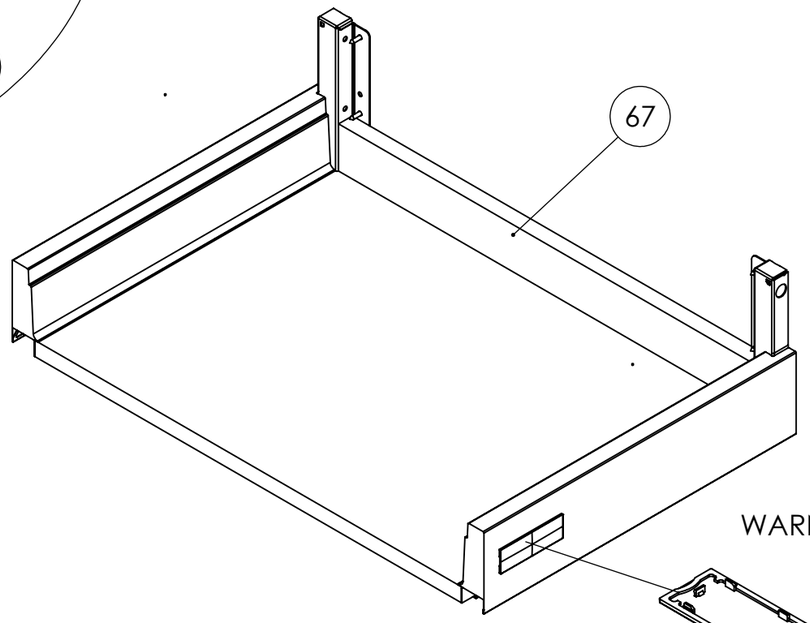


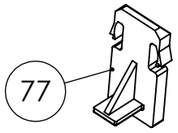


WARNING 1 PIECE

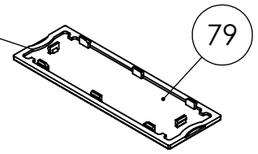


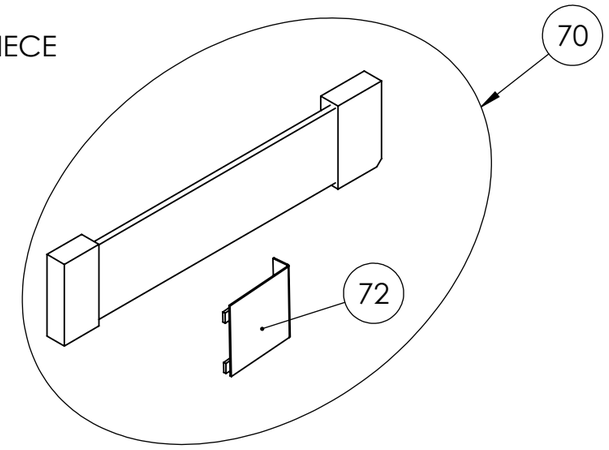


WARNING 1 PIECE

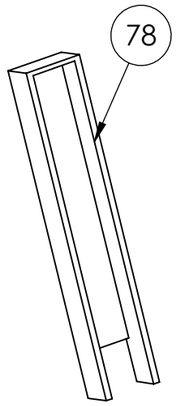


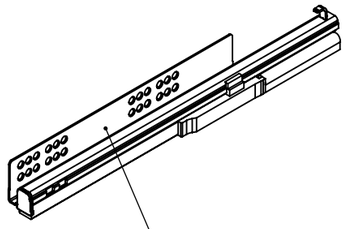


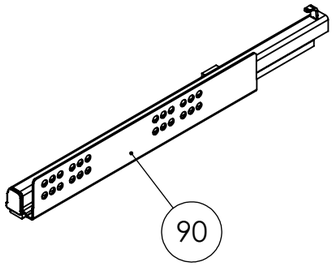


| | | | |
|---|---|---|---|
| MATERIAL: Träger 50 | | DO NOT SCALE DRAWING | SHEET 4 OF 5 |
| SURFACE: | | TITLE: SAV 31 NEO LINE 4 TIROIRS | D |
| LINEAR TOLERANCE: - mm<br>ANGULAR TOLERANCE: - deg | | | |
| WEIGHT: g | | DESCRIPTION: NEO TIROIR HAUT DROIT | |
| SCALE: 1:10 | UNIT: mm / FORMAT: A3 | | |
| AUTOR: C.Dormegnie | CHECKER: C.Dormegnie | | |
| STATUS: APPROVED | | This drawing is the exclusive property of **ADEO**. Any reproduction in part or whole without the written permition of **ADEO** is prohibited. | |
| DATE: 27/10/2020 | | | |

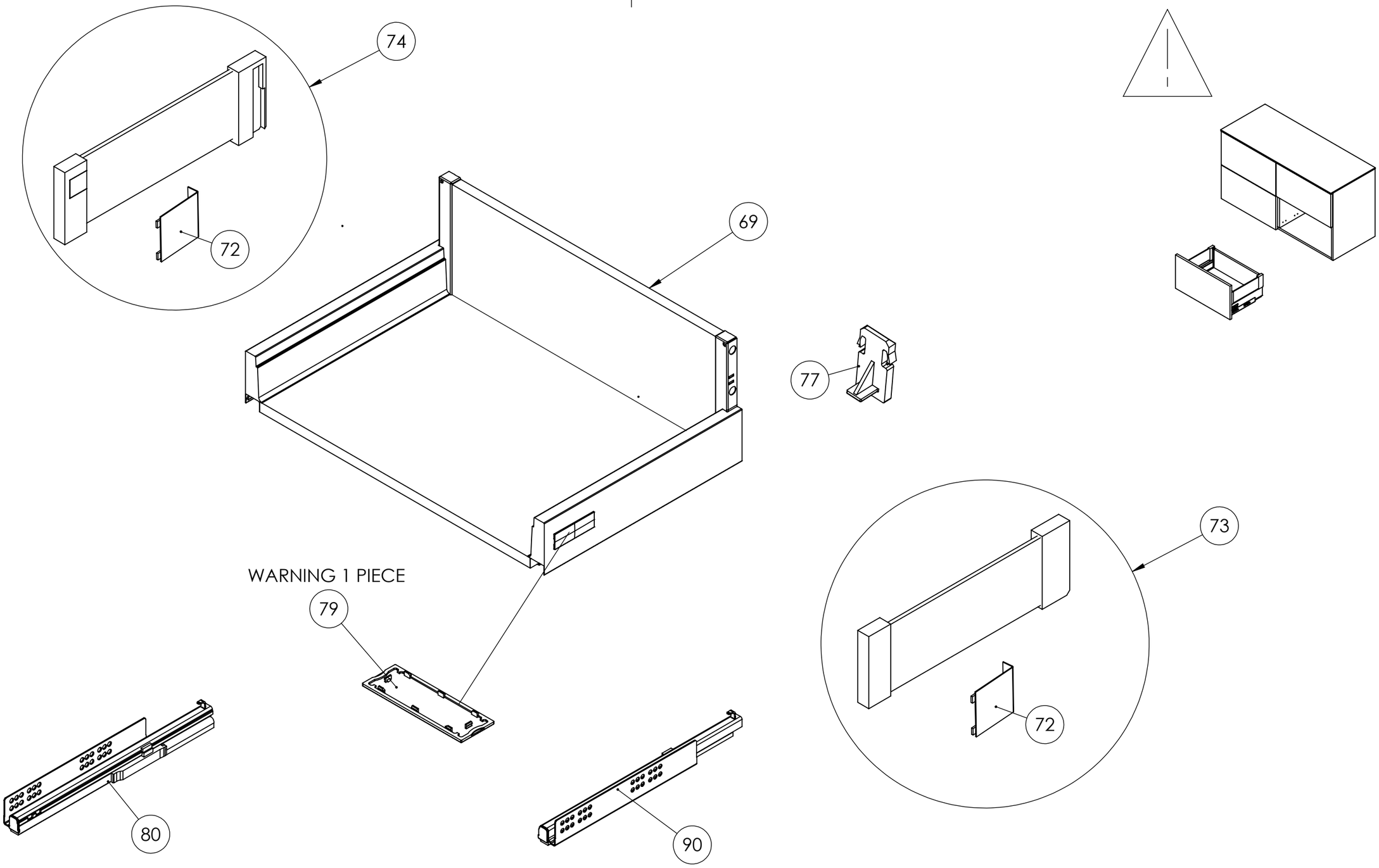


| | | | |
|---|---|---|---|
| MATERIAL: Träger 50 | | DO NOT SCALE DRAWING | SHEET 5 OF 5 |
| SURFACE: | | TITLE: SAV 31 NEO LINE 4 TIROIRS | D |
| LINEAR TOLERANCE: - mm<br>ANGULAR TOLERANCE: - deg | | | |
| WEIGHT: g | | DESCRIPTION: NEO TIROIR BAS DROIT | |
| SCALE: 1:10 | UNIT: mm / FORMAT: A3 | | |
| AUTOR: C.Dormegnie | CHECKER: C.Dormegnie | | |
| STATUS: APPROVED | | This drawing is the exclusive property of **ADEO**. Any reproduction in part or whole without the written permition of **ADEO** is prohibited. | |
| DATE: 27/10/2020 | | | |

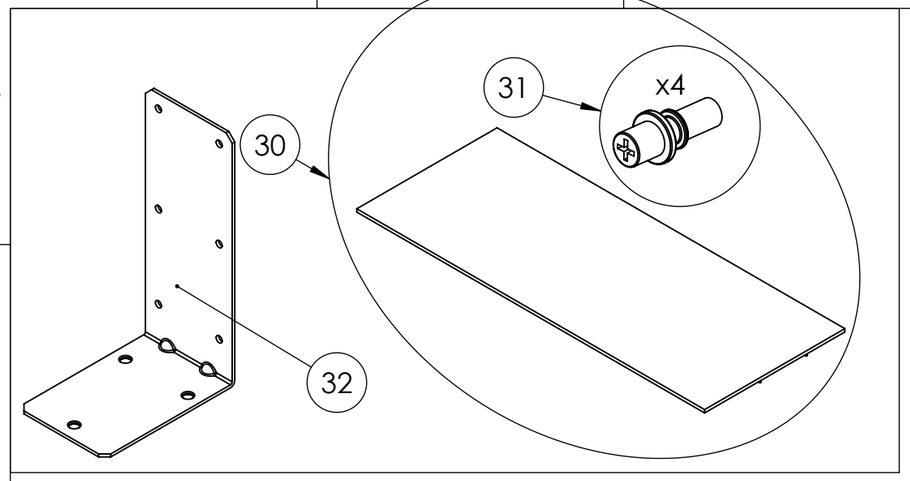


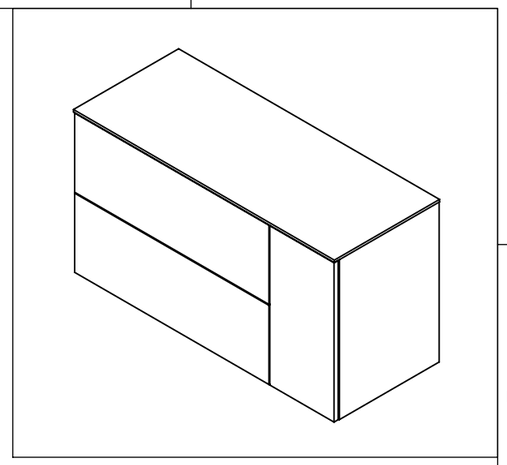

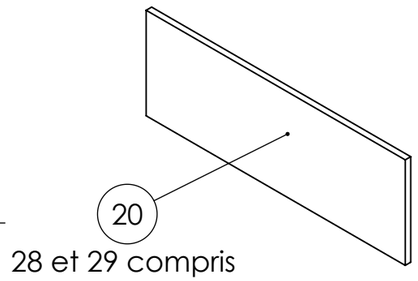


28 et 29 compris

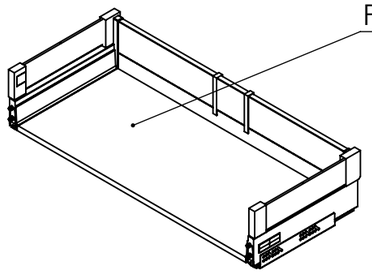


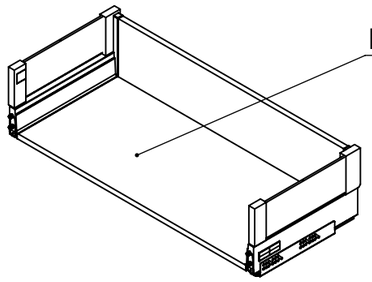


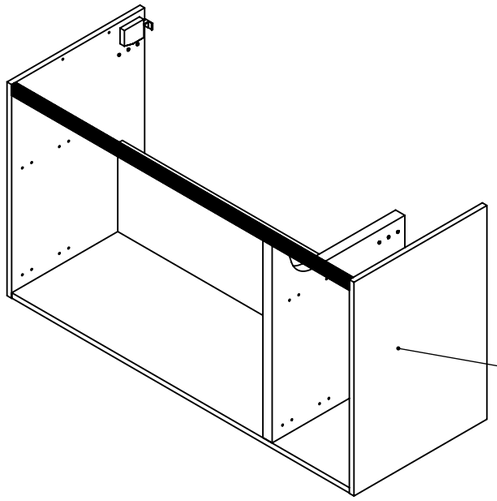


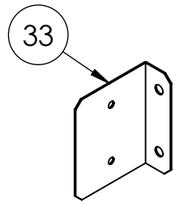


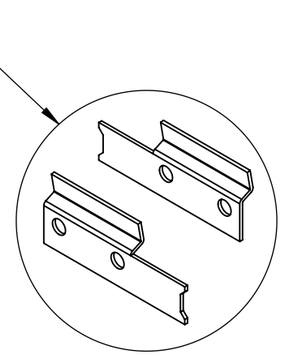


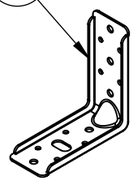


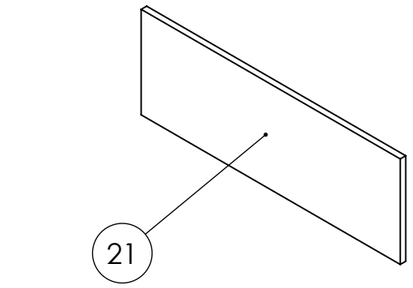


28 et 29 compris

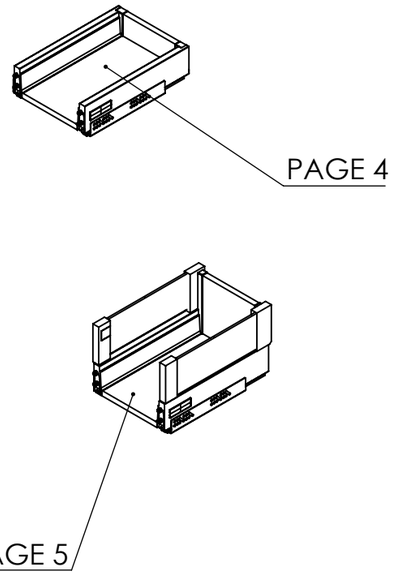


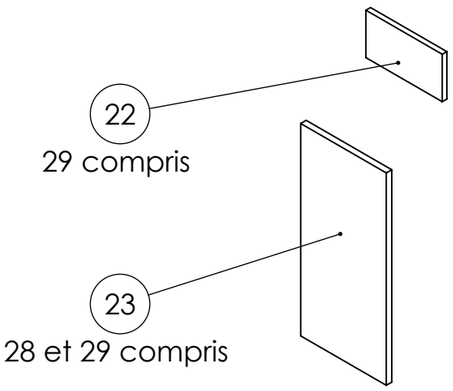


29 compris

28 et 29 compris

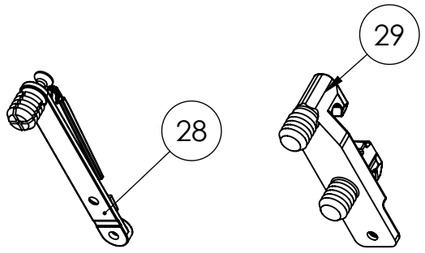


| | | | |
|---|---|---|---|
| MATERIAL: Träger 50 | | DO NOT SCALE DRAWING | SHEET 1 OF 5 |
| SURFACE: | | TITLE: SAV 32 NEO LINE 2 TIROIRS 2 TIROIRS FLACONNIER | C |
| LINEAR TOLERANCE: - mm<br>ANGULAR TOLERANCE: - deg | | | |
| WEIGHT: g | | DESCRIPTION: NEO LINE - 4 TIROIRS (tiroir anglaise) | |
| SCALE: 1:10 | UNIT: mm / FORMAT: A3 | | |
| AUTOR: C.Dormegnie | CHECKER: C.Dormegnie | | |
| STATUS: APPROVED | | This drawing is the exclusive property of **ADEO**. Any reproduction in part or whole without the written permition of **ADEO** is prohibited. | |
| DATE: 06/04/2021 | | | |

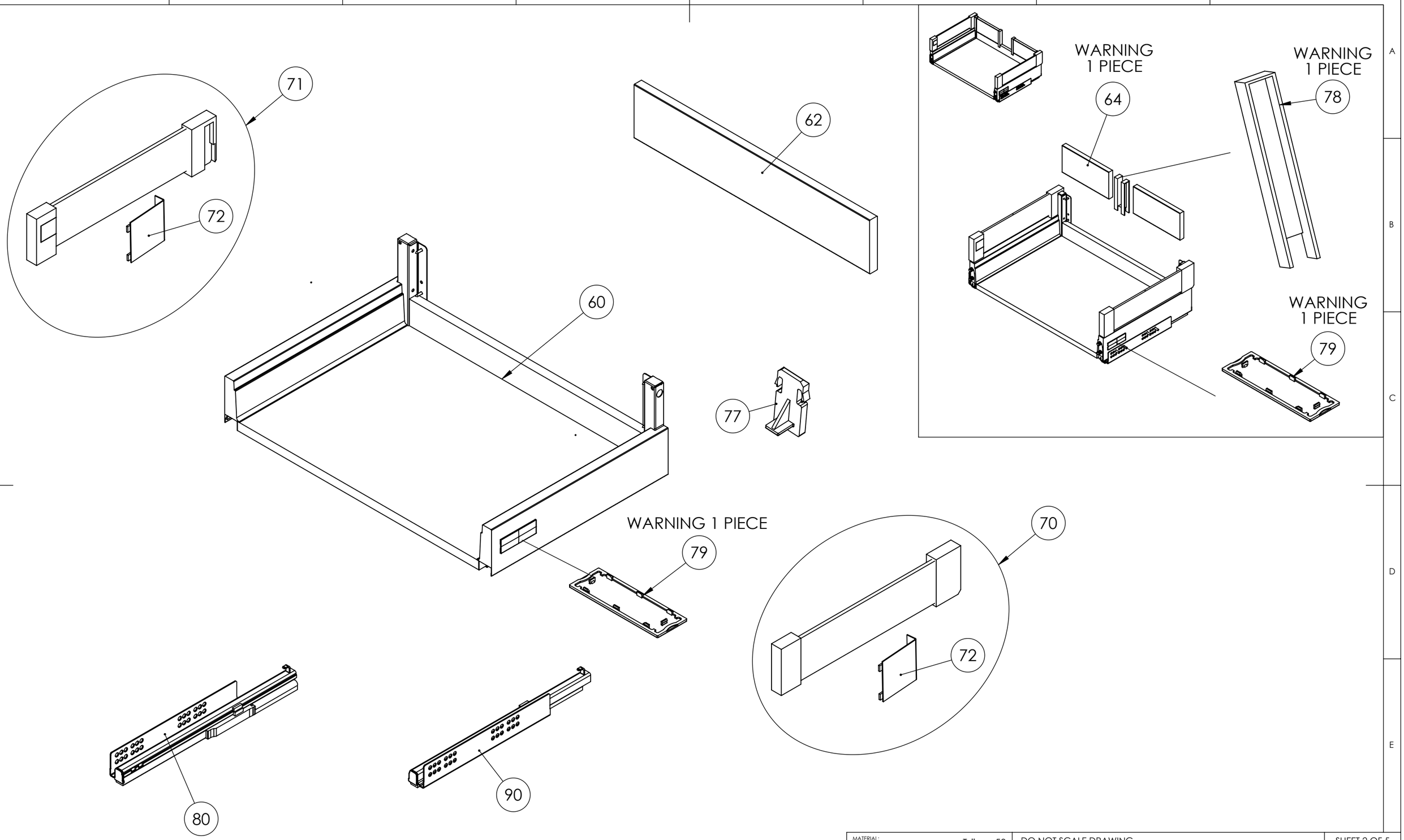


| | | | |
|---|---|---|---|
| MATERIAL: Träger 50 | | DO NOT SCALE DRAWING | SHEET 2 OF 5 |
| SURFACE: | | TITLE: SAV 32 NEO LINE 2 TIROIRS 2 TIROIRS FLACONNIER | C |
| LINEAR TOLERANCE: - mm<br>ANGULAR TOLERANCE: - deg | | | |
| WEIGHT: g | | DESCRIPTION: NEO TIROIR HAUT | |
| SCALE: 1:10 | UNIT: mm / FORMAT: A3 | | |
| AUTOR: C.Dormegnie | CHECKER: C.Dormegnie | | |
| STATUS: APPROVED | | This drawing is the exclusive property of **ADEO**. Any reproduction in part or whole without the written permition of **ADEO** is prohibited. | |
| DATE: 06/04/2021 | | | |

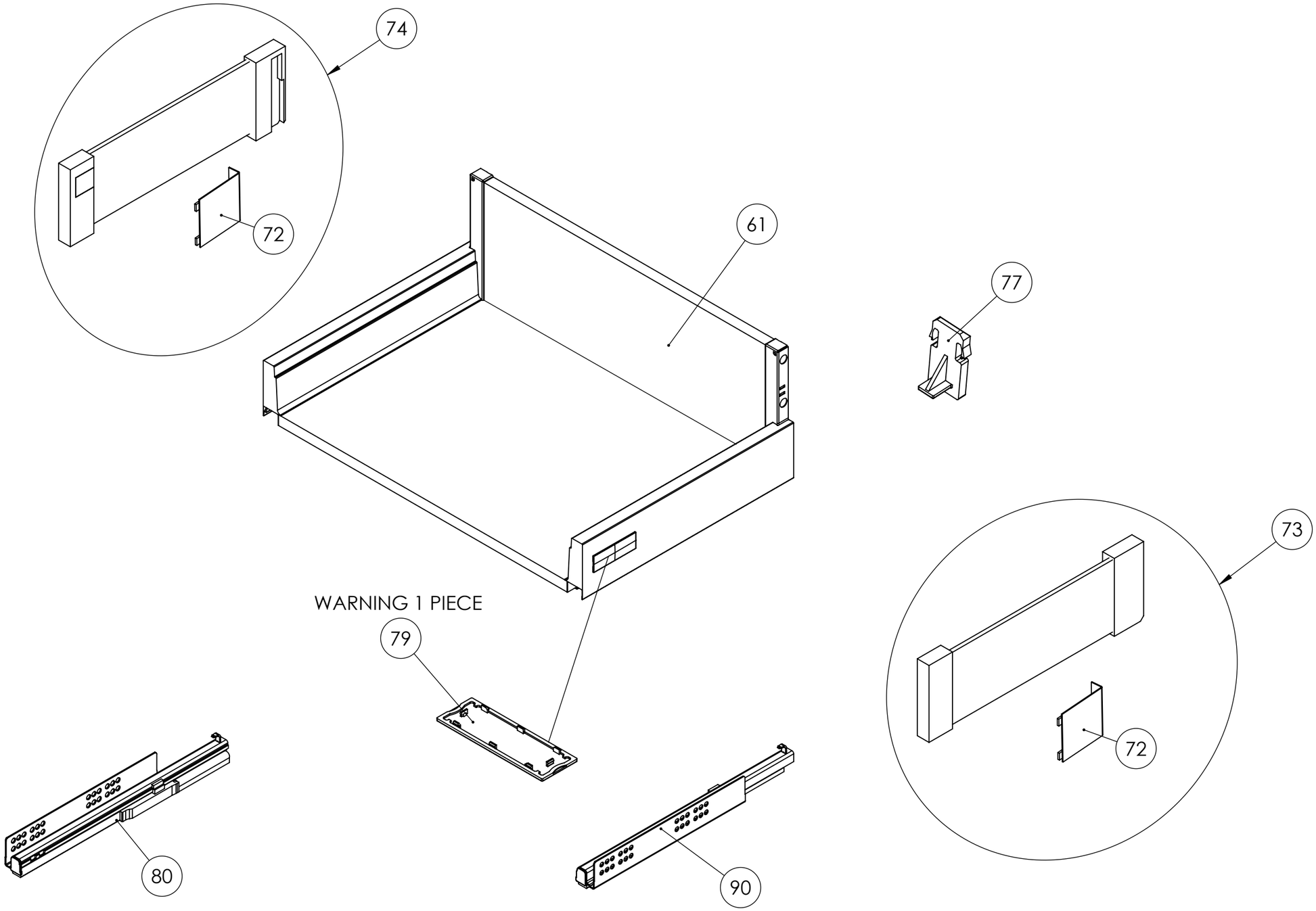


| | | | |
|---|---|---|---|
| MATERIAL: Träger 50 | DO NOT SCALE DRAWING | | SHEET 3 OF 5 |
| SURFACE: | TITLE: SAV 32 NEO LINE 2 TIROIRS 2 TIROIRS FLACONNIER | | C |
| LINEAR TOLERANCE: - mm<br>ANGULAR TOLERANCE: - deg | | | |
| WEIGHT: g | DESCRIPTION: NEO TIROIR BAS | | |
| SCALE: 1:10 / UNIT: mm / FORMAT: A3 | | | |
| AUTOR: C.Dormegnie / CHECKER: C.Dormegnie | | | |
| STATUS: APPROVED | This drawing is the exclusive property of **ADEO**. Any reproduction in part or whole without the written permition of **ADEO** is prohibited. | | |
| DATE: 06/04/2021 | | | |

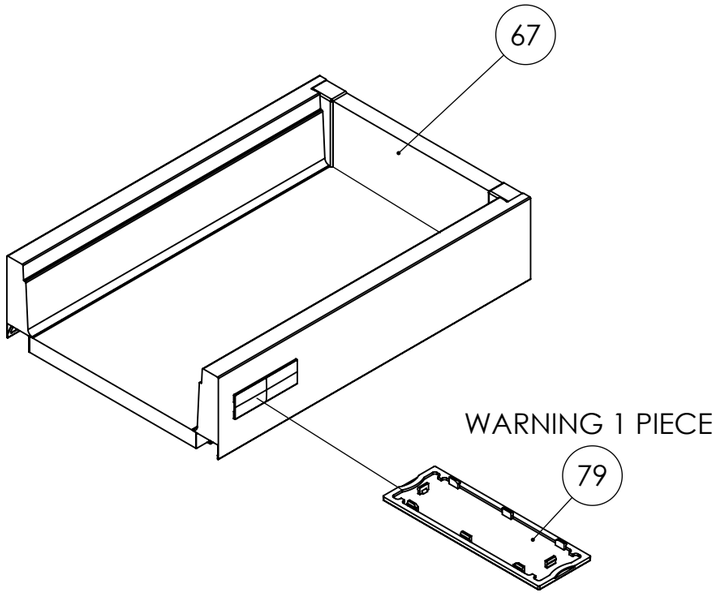


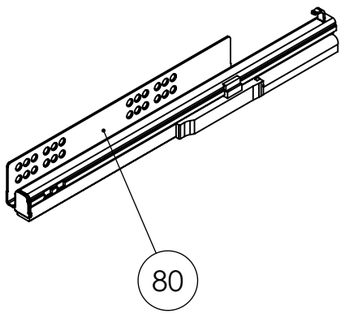


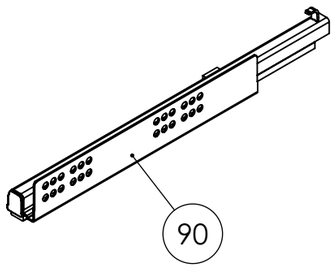


| | | | |
|---|---|---|---|
| MATERIAL: Träger 50 | | DO NOT SCALE DRAWING | SHEET 4 OF 5 |
| SURFACE: | | TITLE: SAV 32 NEO LINE 2 TIROIRS 2 TIROIRS FLACONNIER | C |
| LINEAR TOLERANCE: - mm<br>ANGULAR TOLERANCE: - deg | | | |
| WEIGHT: g | | DESCRIPTION: NEO TIROIR FLACONNIER HAUT | |
| SCALE: 1:10 | UNIT: mm / FORMAT: A3 | | |
| AUTOR: C.Dormegnie | CHECKER: C.Dormegnie | | |
| STATUS: APPROVED | | This drawing is the exclusive property of **ADEO**. Any reproduction in part or whole without the written permition of **ADEO** is prohibited. | |
| DATE: 06/04/2021 | | | |

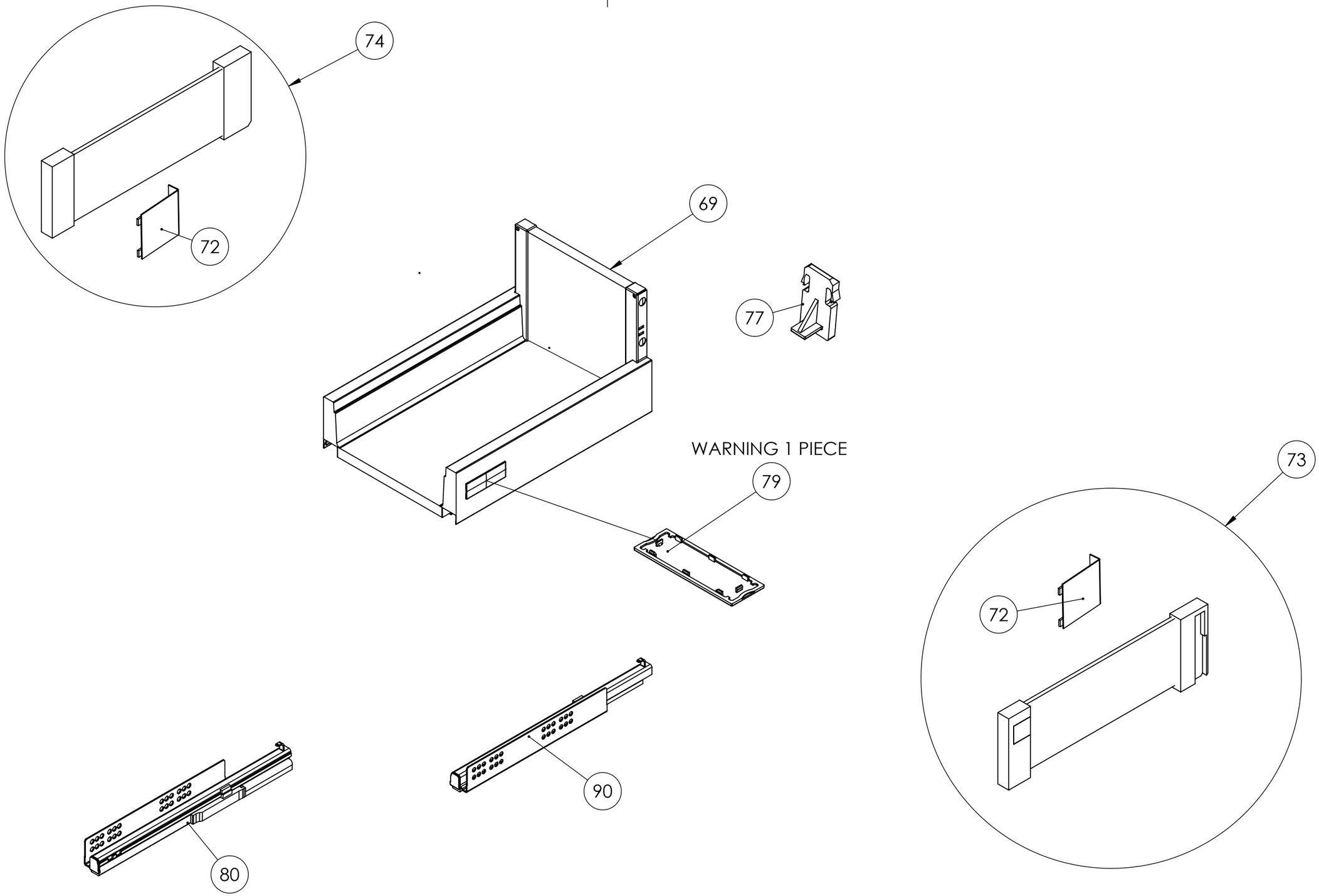


| | | | |
|---|---|---|---|
| MATERIAL: Träger 50 | | DO NOT SCALE DRAWING | SHEET 5 OF 5 |
| SURFACE: | | TITLE: SAV 32 NEO LINE 2 TIROIRS 2 TIROIRS FLACONNIER | C |
| LINEAR TOLERANCE: - mm<br>ANGULAR TOLERANCE: - deg | | | |
| WEIGHT: g | | DESCRIPTION: NEO TIROIR FLACONNIER BAS | |
| SCALE: 1:10 | UNIT: mm / FORMAT: A3 | | |
| AUTOR: C.Dormegnie | CHECKER: C.Dormegnie | | |
| STATUS: APPROVED | | This drawing is the exclusive property of **ADEO**. Any reproduction in part or whole without the written permition of **ADEO** is prohibited. | |
| DATE: 06/04/2021 | | | |

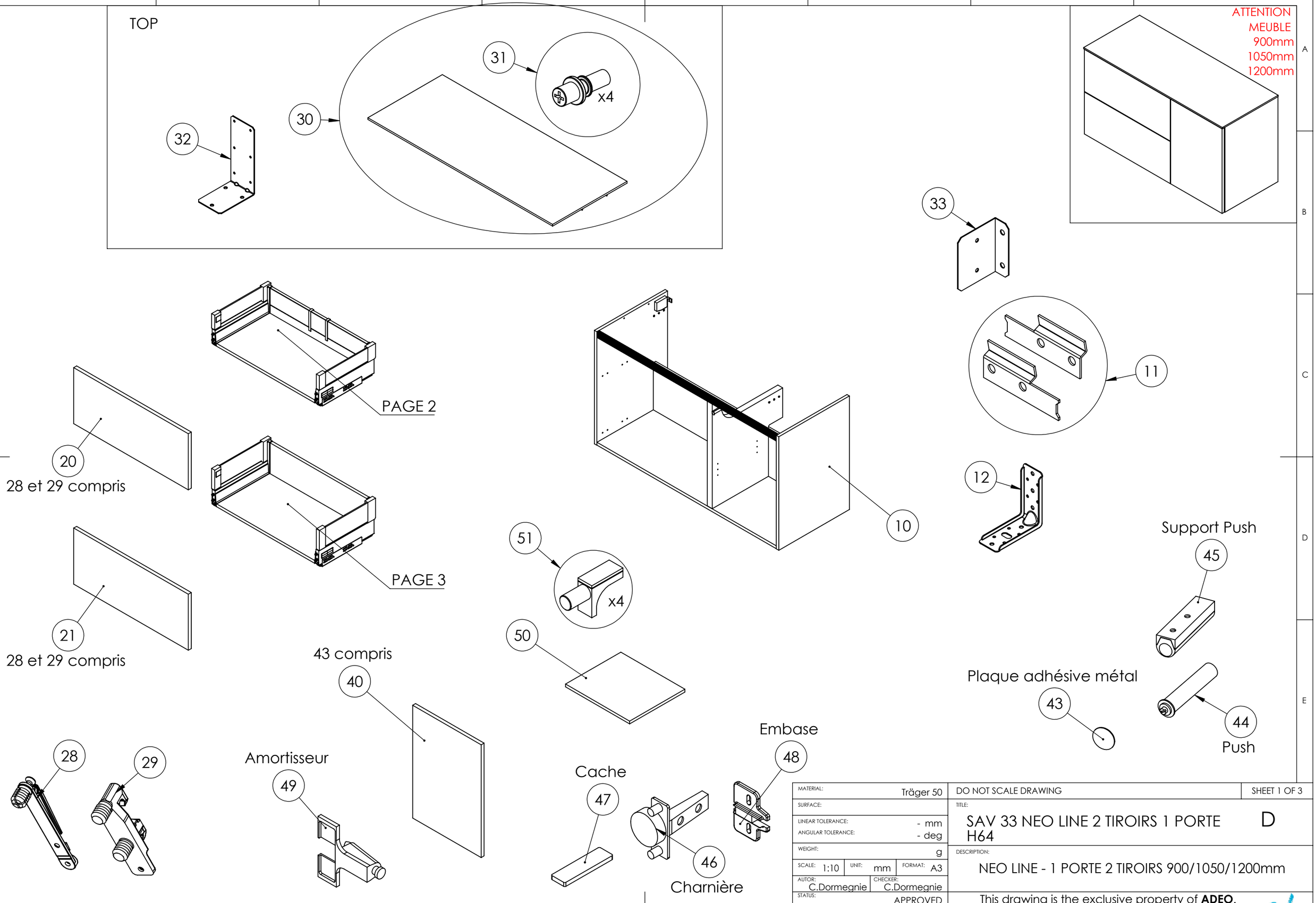


| | | | |
|---|---|---|---|
| MATERIAL: | Träger 50 | DO NOT SCALE DRAWING | SHEET 1 OF 3 |
| SURFACE: | | TITLE: SAV 33 NEO LINE 2 TIROIRS 1 PORTE H64 | D |
| LINEAR TOLERANCE: | - mm | | |
| ANGULAR TOLERANCE: | - deg | | |
| WEIGHT: | g | DESCRIPTION: NEO LINE - 1 PORTE 2 TIROIRS 900/1050/1200mm | |
| SCALE: 1:10 / UNIT: mm | FORMAT: A3 | | |
| AUTOR: C.Dormegnie | CHECKER: C.Dormegnie | | |
| STATUS: | APPROVED | | |
| DATE: 10/11/2020 | | | |

This drawing is the exclusive property of **ADEO**.
Any reproduction in part or whole without the written permition of **ADEO** is prohibited.

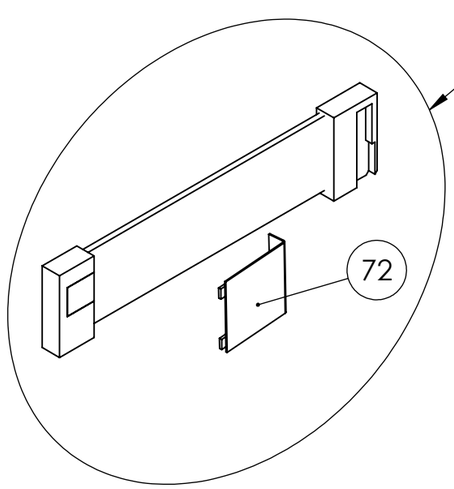


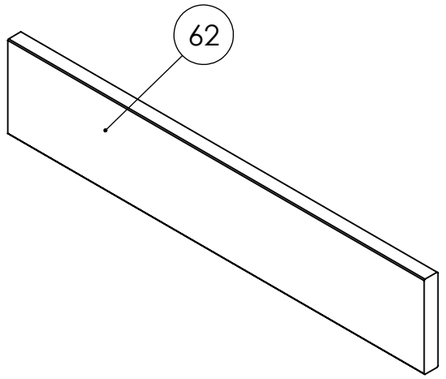


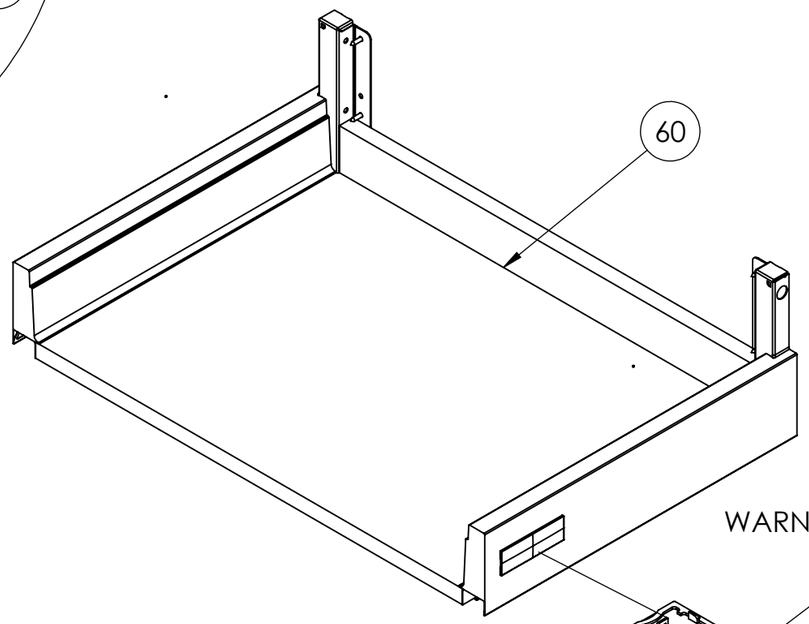


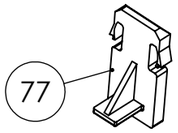


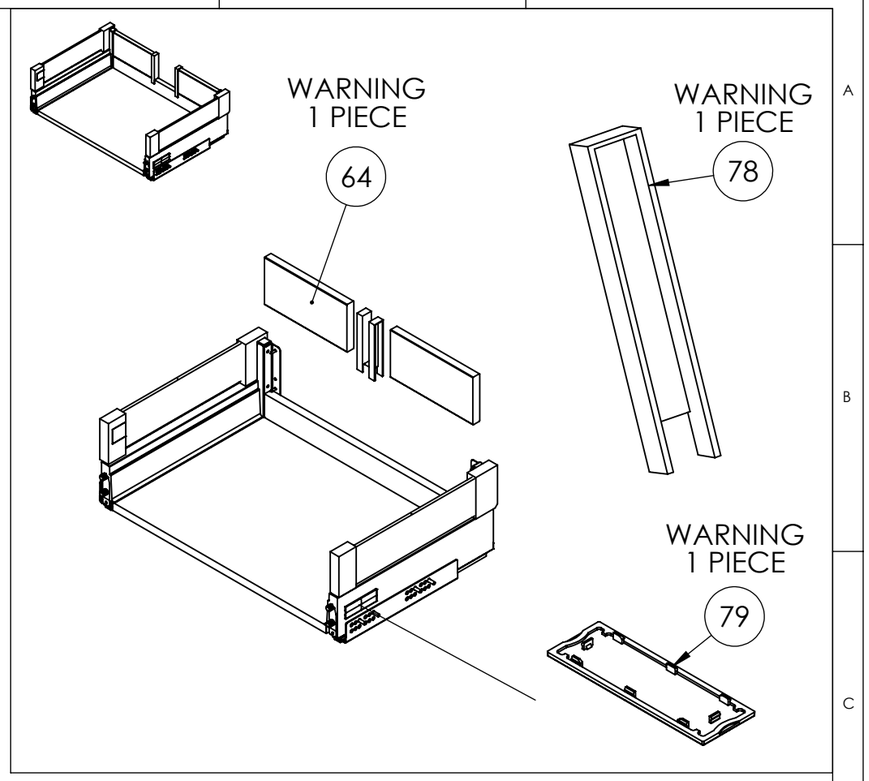


WARNING 1 PIECE

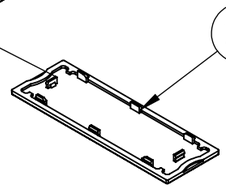


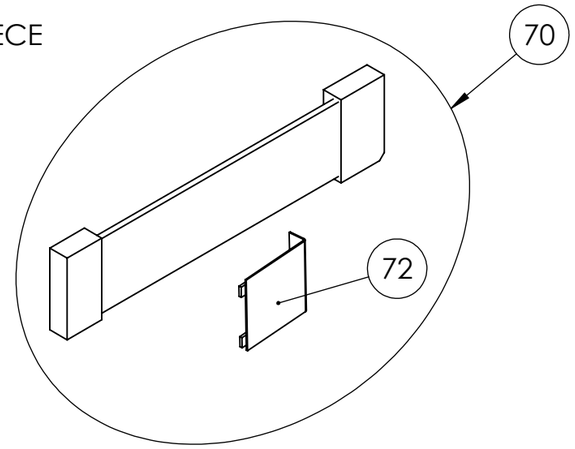


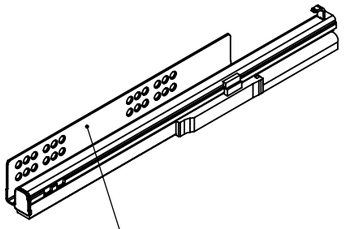


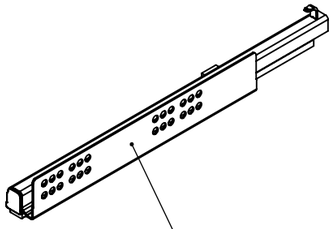


| | | | |
|---|---|---|---|
| MATERIAL: Träger 50 | | DO NOT SCALE DRAWING | SHEET 2 OF 3 |
| SURFACE: | | TITLE: SAV 33 NEO LINE 2 TIROIRS 1 PORTE H64 | D |
| LINEAR TOLERANCE: - mm<br>ANGULAR TOLERANCE: - deg | | | |
| WEIGHT: g | | DESCRIPTION: NEO TIROIR HAUT | |
| SCALE: 1:10 | UNIT: mm / FORMAT: A3 | | |
| AUTOR: C.Dormegnie | CHECKER: C.Dormegnie | | |
| STATUS: APPROVED | | This drawing is the exclusive property of **ADEO**. Any reproduction in part or whole without the written permition of **ADEO** is prohibited. | |
| DATE: 10/11/2020 | | | |

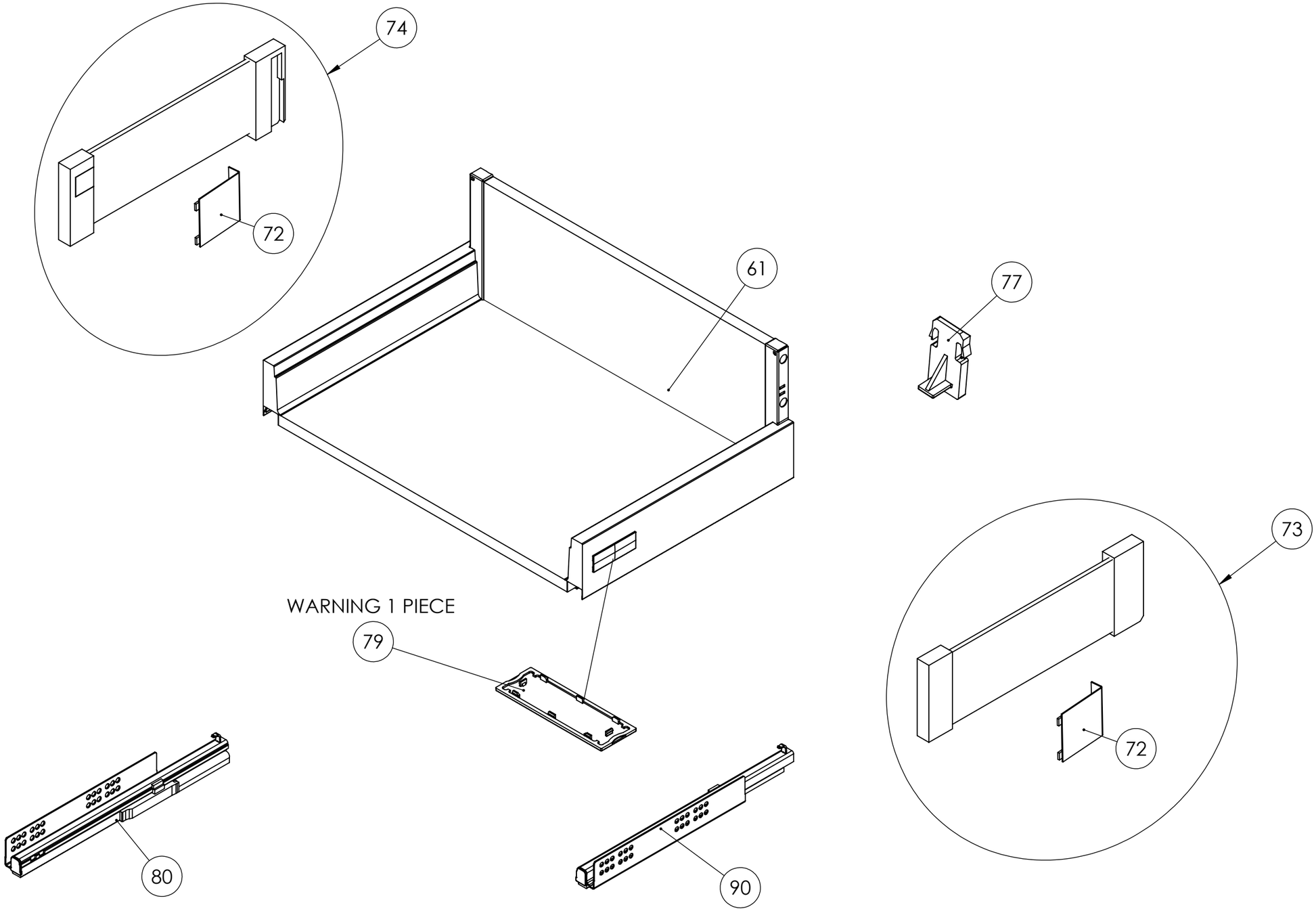


| | | | |
|---|---|---|---|
| MATERIAL: Träger 50 | DO NOT SCALE DRAWING | | SHEET 3 OF 3 |
| SURFACE: | TITLE: SAV 33 NEO LINE 2 TIROIRS 1 PORTE H64 | | D |
| LINEAR TOLERANCE: - mm<br>ANGULAR TOLERANCE: - deg | | | |
| WEIGHT: g | DESCRIPTION: NEO TIROIR BAS | | |
| SCALE: 1:10 / UNIT: mm / FORMAT: A3 | | | |
| AUTOR: C.Dormegnie / CHECKER: C.Dormegnie | | | |
| STATUS: APPROVED | This drawing is the exclusive property of **ADEO**. Any reproduction in part or whole without the written permition of **ADEO** is prohibited. | | |
| DATE: 10/11/2020 | | | |

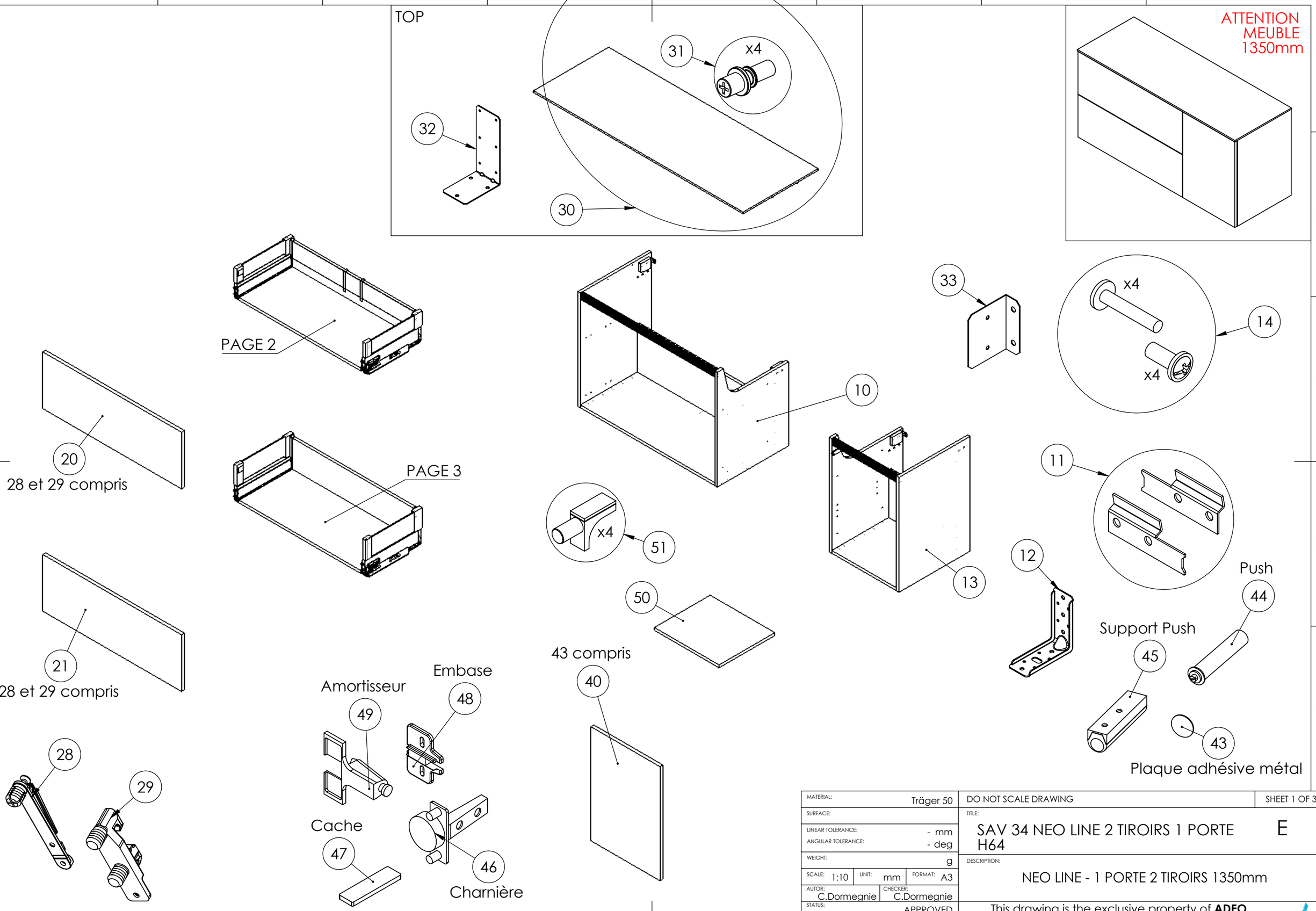


| | | | |
|---|---|---|---|
| MATERIAL: Träger 50 | DO NOT SCALE DRAWING | | SHEET 1 OF 3 |
| SURFACE: | TITLE: SAV 34 NEO LINE 2 TIROIRS 1 PORTE H64 | | E |
| LINEAR TOLERANCE: - mm<br>ANGULAR TOLERANCE: - deg | | | |
| WEIGHT: g | DESCRIPTION: NEO LINE - 1 PORTE 2 TIROIRS 1350mm | | |
| SCALE: 1:10 / UNIT: mm / FORMAT: A3 | | | |
| AUTOR: C.Dormegnie / CHECKER: C.Dormegnie | | | |
| STATUS: APPROVED | This drawing is the exclusive property of **ADEO**. Any reproduction in part or whole without the written permition of **ADEO** is prohibited. | | |
| DATE: 10/11/2020 | | | |

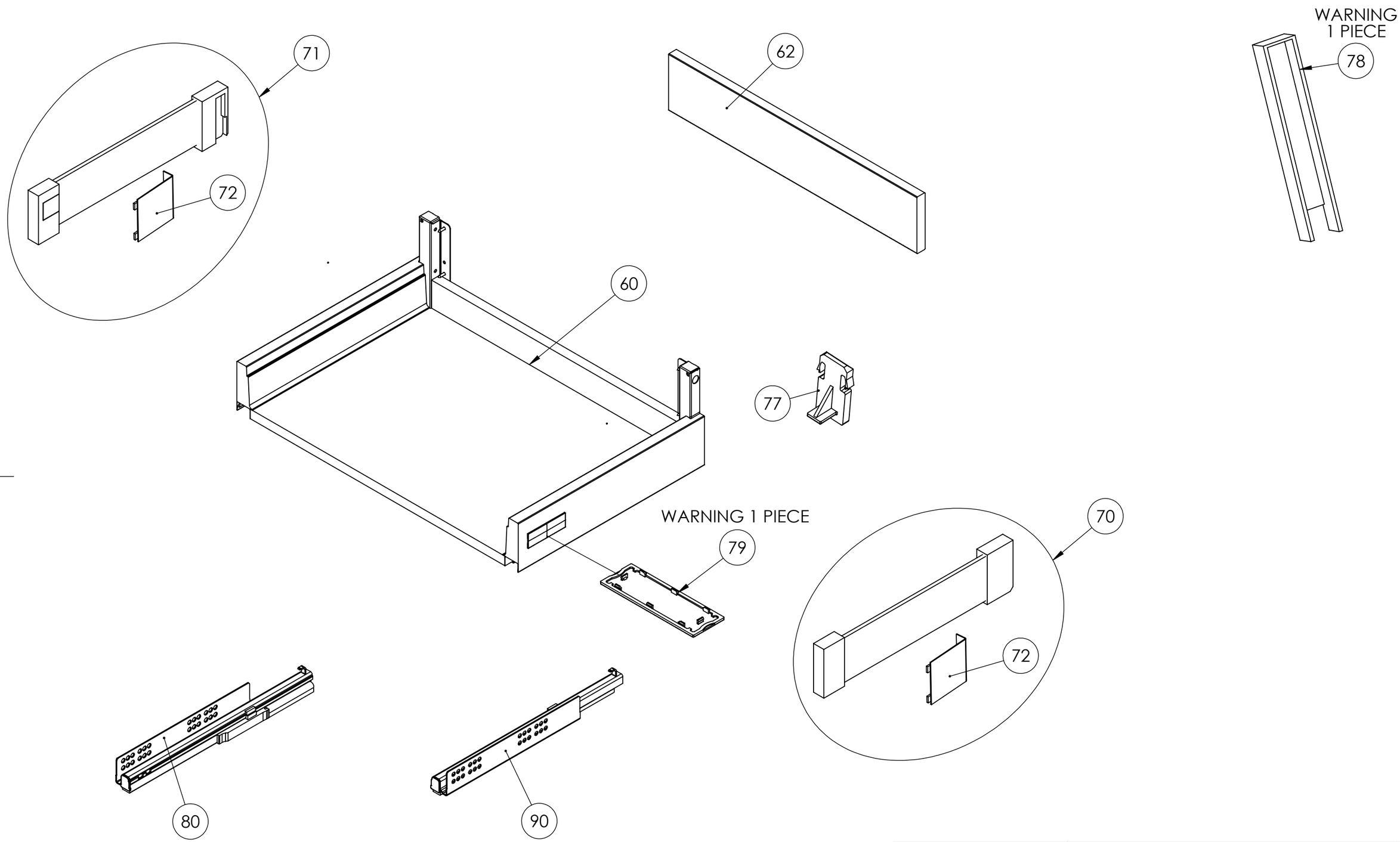


| | | | |
|---|---|---|---|
| MATERIAL: Träger 50 | | DO NOT SCALE DRAWING | SHEET 2 OF 3 |
| SURFACE: | | TITLE: SAV 34 NEO LINE 2 TIROIRS 1 PORTE H64 | E |
| LINEAR TOLERANCE: - mm<br>ANGULAR TOLERANCE: - deg | | | |
| WEIGHT: g | | DESCRIPTION: NEO TIROIR HAUT | |
| SCALE: 1:10 | UNIT: mm / FORMAT: A3 | | |
| AUTOR: C.Dormegnie | CHECKER: C.Dormegnie | | |
| STATUS: APPROVED | | This drawing is the exclusive property of **ADEO**. Any reproduction in part or whole without the written permition of **ADEO** is prohibited. | |
| DATE: 10/11/2020 | | | |

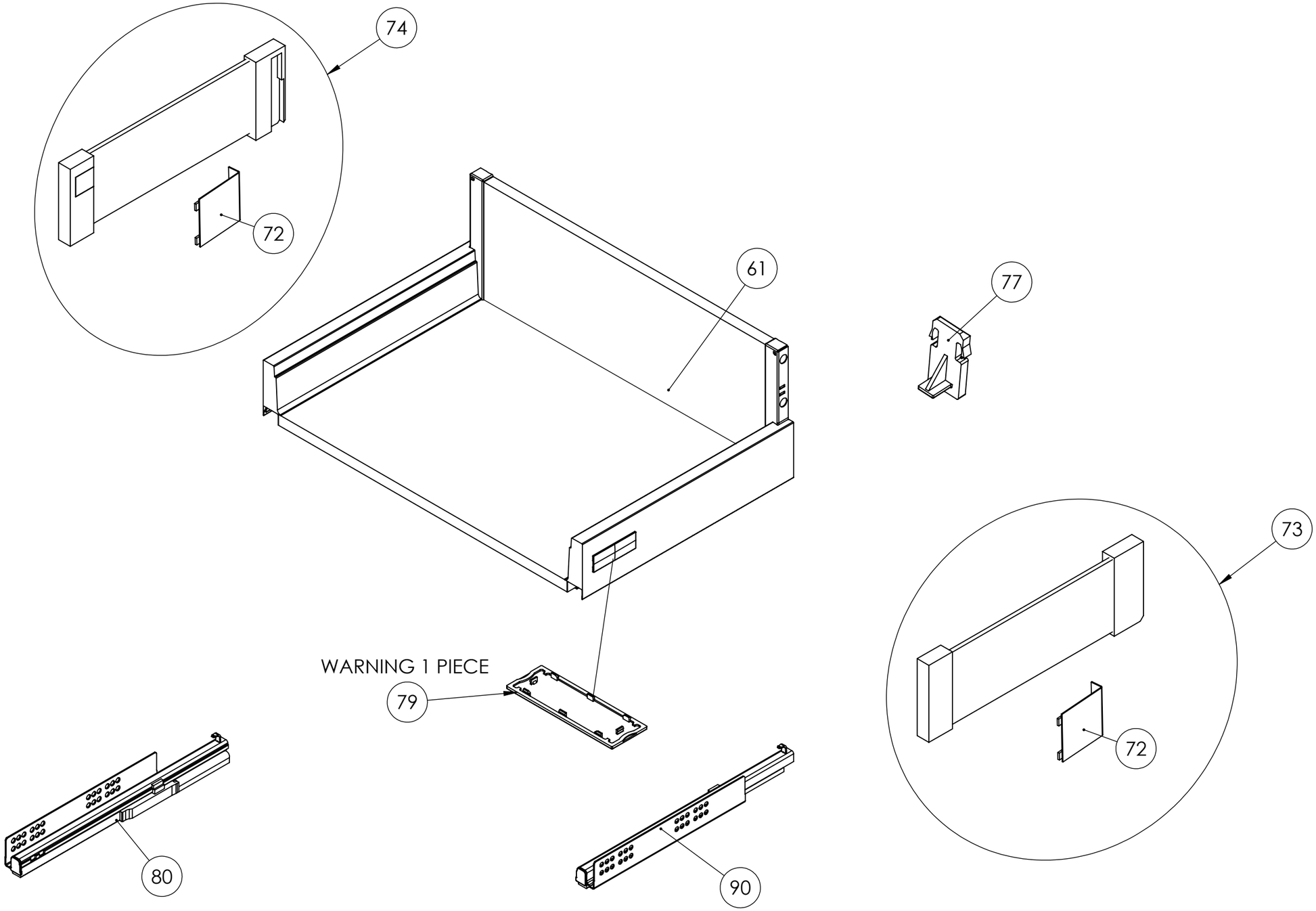


| | | | |
|---|---|---|---|
| MATERIAL: Träger 50 | | DO NOT SCALE DRAWING | SHEET 3 OF 3 |
| SURFACE: | | TITLE: SAV 34 NEO LINE 2 TIROIRS 1 PORTE H64 | E |
| LINEAR TOLERANCE: - mm<br>ANGULAR TOLERANCE: - deg | | | |
| WEIGHT: g | | DESCRIPTION: NEO TIROIR BAS | |
| SCALE: 1:10 | UNIT: mm / FORMAT: A3 | | |
| AUTOR: C.Dormegnie | CHECKER: C.Dormegnie | | |
| STATUS: APPROVED | | | |
| DATE: 10/11/2020 | | | |

This drawing is the exclusive property of **ADEO**.
Any reproduction in part or whole without the written permition of **ADEO** is prohibited.

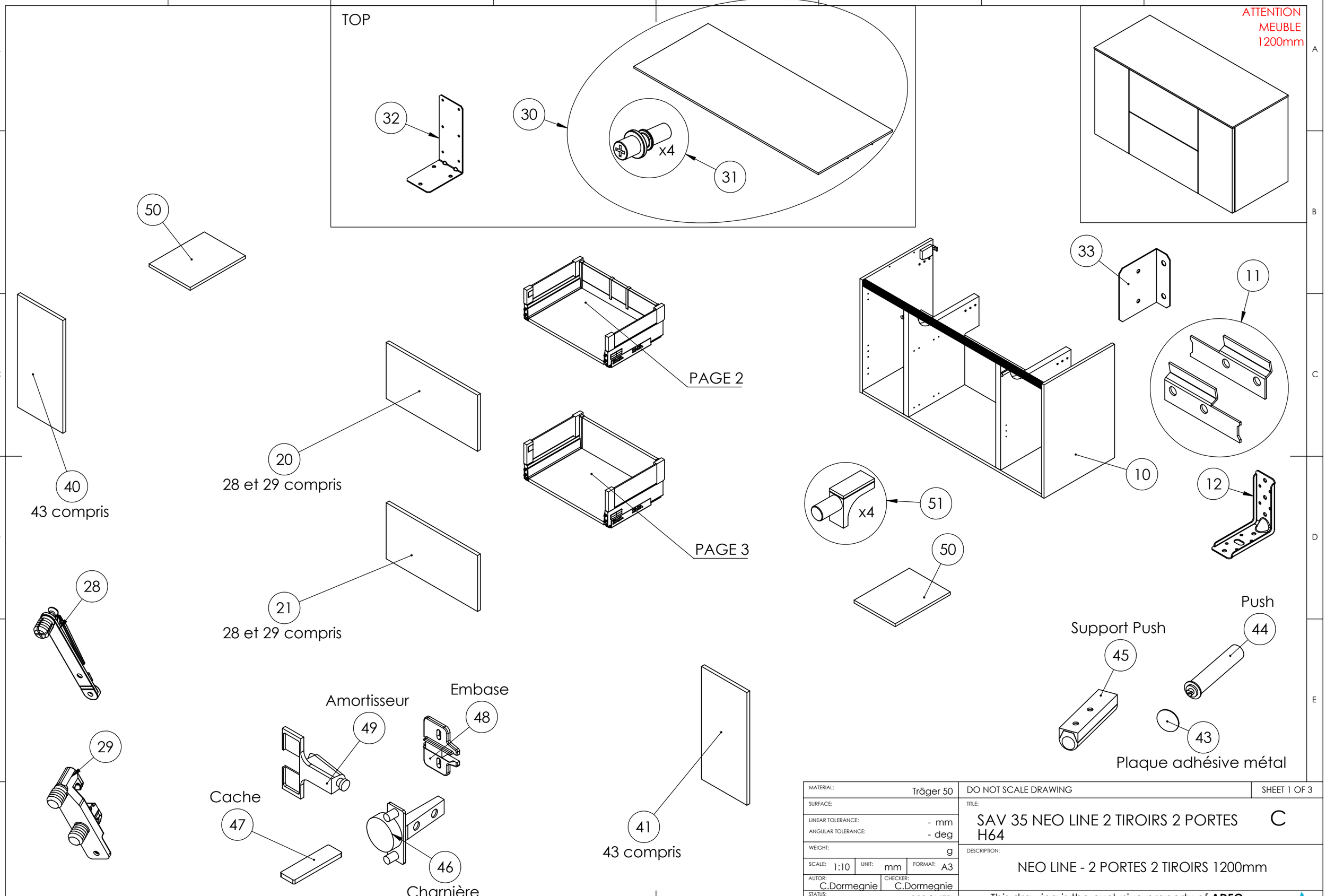


| | | | |
|---|---|---|---|
| MATERIAL: Träger 50 | | DO NOT SCALE DRAWING | SHEET 1 OF 3 |
| SURFACE: | | TITLE: SAV 35 NEO LINE 2 TIROIRS 2 PORTES H64 | C |
| LINEAR TOLERANCE: - mm<br>ANGULAR TOLERANCE: - deg | | | |
| WEIGHT: g | | DESCRIPTION: NEO LINE - 2 PORTES 2 TIROIRS 1200mm | |
| SCALE: 1:10 | UNIT: mm / FORMAT: A3 | | |
| AUTOR: C.Dormegnie | CHECKER: C.Dormegnie | | |
| STATUS: APPROVED | | This drawing is the exclusive property of **ADEO**. Any reproduction in part or whole without the written permition of **ADEO** is prohibited. | |
| DATE: 13/11/2020 | | | |

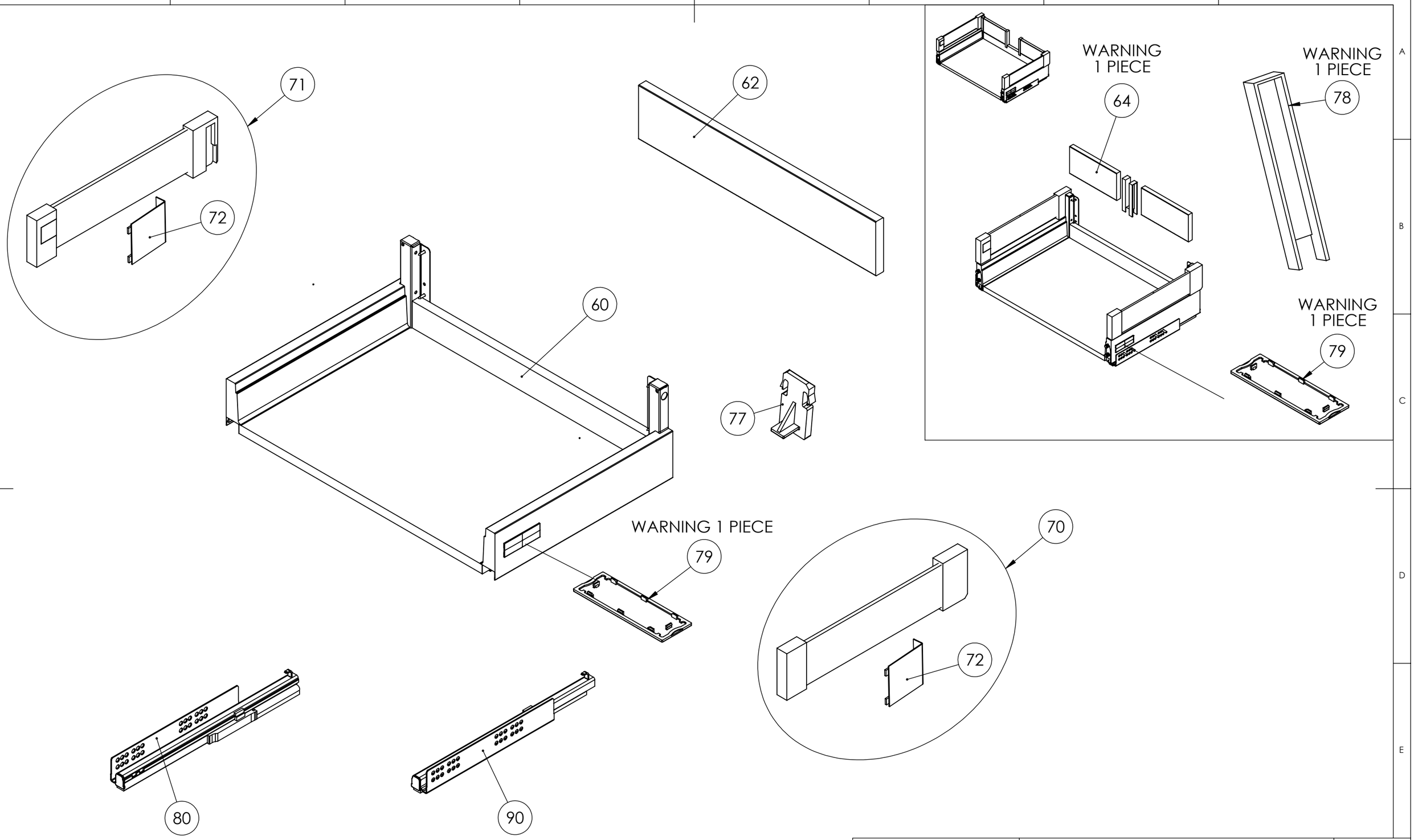


| | | | |
|---|---|---|---|
| MATERIAL: Träger 50 | | DO NOT SCALE DRAWING | SHEET 2 OF 3 |
| SURFACE: | | TITLE: SAV 35 NEO LINE 2 TIROIRS 2 PORTES H64 | C |
| LINEAR TOLERANCE: - mm<br>ANGULAR TOLERANCE: - deg | | | |
| WEIGHT: g | | DESCRIPTION: NEO TIROIR HAUT | |
| SCALE: 1:10 | UNIT: mm / FORMAT: A3 | | |
| AUTOR: C.Dormegnie | CHECKER: C.Dormegnie | | |
| STATUS: APPROVED | | This drawing is the exclusive property of **ADEO**. Any reproduction in part or whole without the written permition of **ADEO** is prohibited. | |
| DATE: 13/11/2020 | | | |

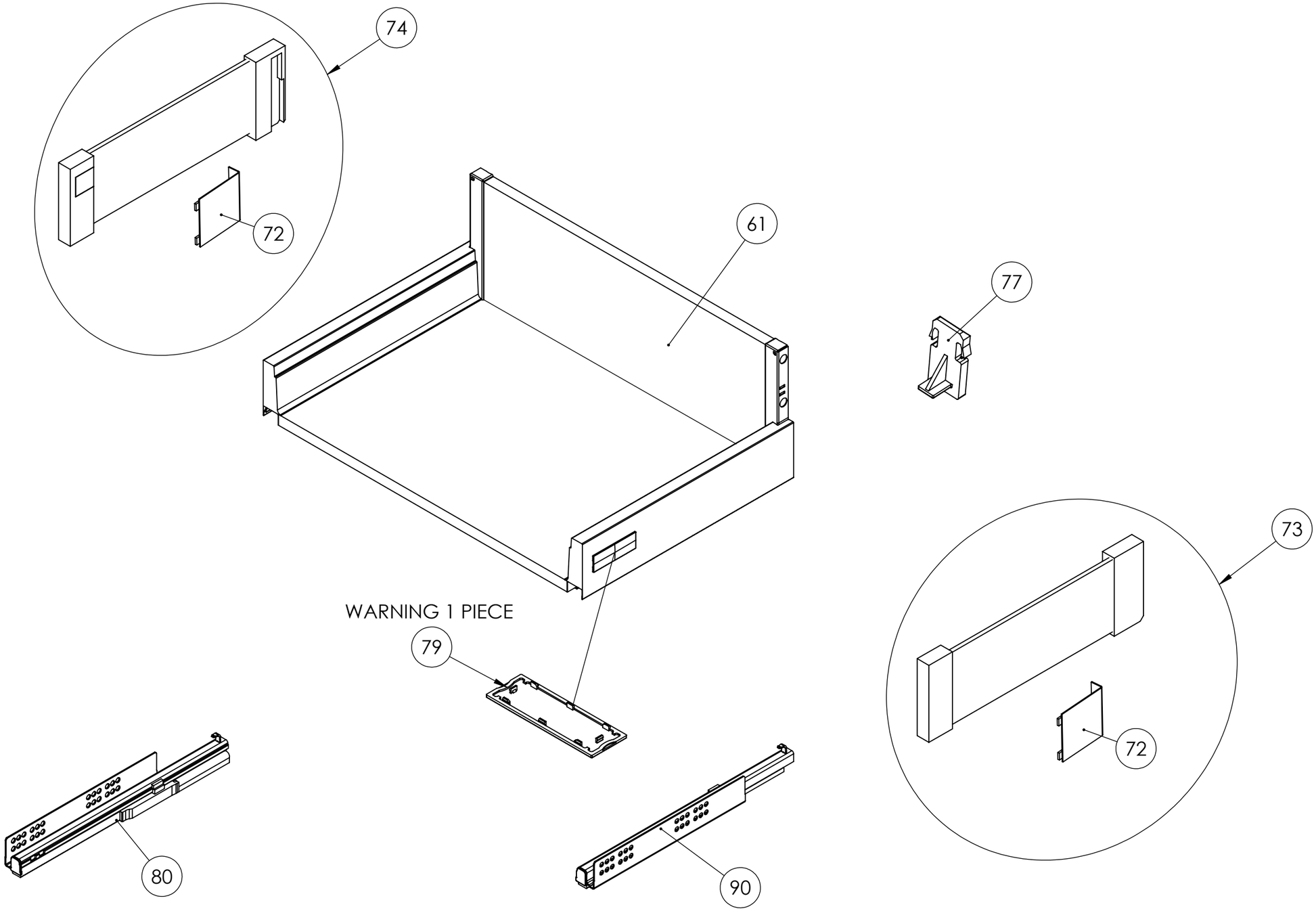


| | | | |
|---|---|---|---|
| MATERIAL: | Träger 50 | DO NOT SCALE DRAWING | SHEET 3 OF 3 |
| SURFACE: | | TITLE: SAV 35 NEO LINE 2 TIROIRS 2 PORTES H64 | C |
| LINEAR TOLERANCE: - mm<br>ANGULAR TOLERANCE: - deg | | | |
| WEIGHT: g | | DESCRIPTION: NEO TIROIR BAS | |
| SCALE: 1:10 | UNIT: mm / FORMAT: A3 | | |
| AUTOR: C.Dormegnie | CHECKER: C.Dormegnie | | |
| STATUS: | APPROVED | This drawing is the exclusive property of **ADEO**. Any reproduction in part or whole without the written permition of **ADEO** is prohibited. | |
| DATE: 13/11/2020 | | | |

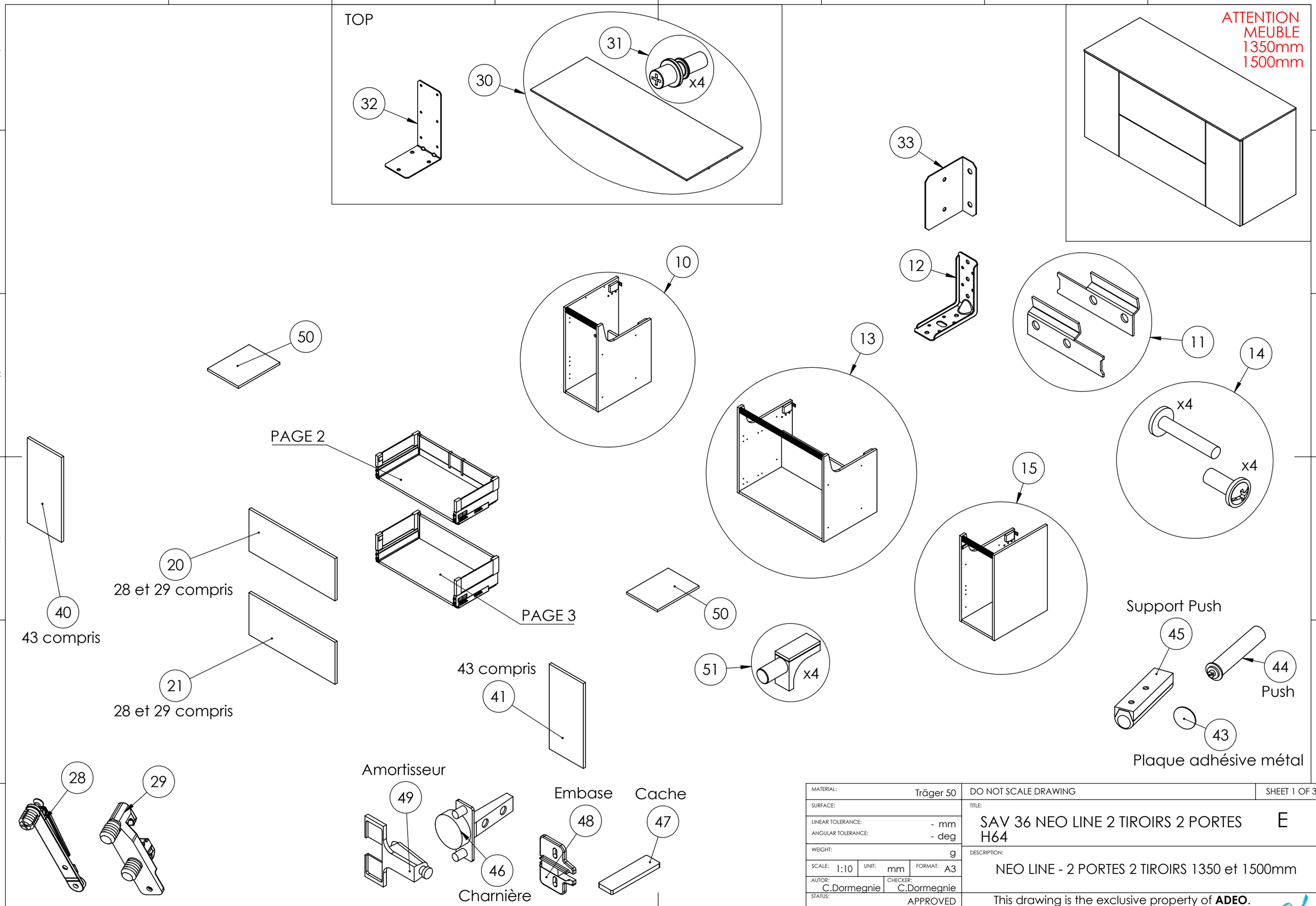


| | | | |
|---|---|---|---|
| MATERIAL: Träger 50 | | DO NOT SCALE DRAWING | SHEET 1 OF 3 |
| SURFACE: | | TITLE: SAV 36 NEO LINE 2 TIROIRS 2 PORTES H64 | E |
| LINEAR TOLERANCE: - mm<br>ANGULAR TOLERANCE: - deg | | | |
| WEIGHT: g | | DESCRIPTION: NEO LINE - 2 PORTES 2 TIROIRS 1350 et 1500mm | |
| SCALE: 1:10 | UNIT: mm / FORMAT: A3 | | |
| AUTOR: C.Dormegnie | CHECKER: C.Dormegnie | | |
| STATUS: APPROVED | | This drawing is the exclusive property of **ADEO**. Any reproduction in part or whole without the written permition of **ADEO** is prohibited. | |
| DATE: 01/12/2020 | | | |

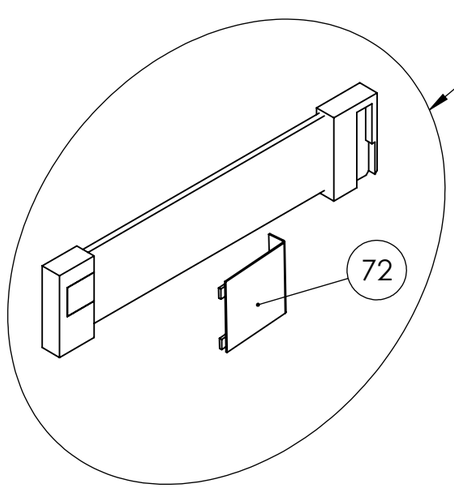


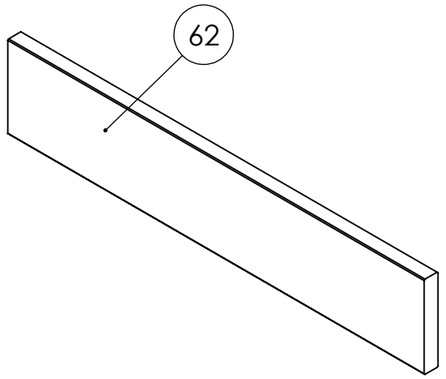


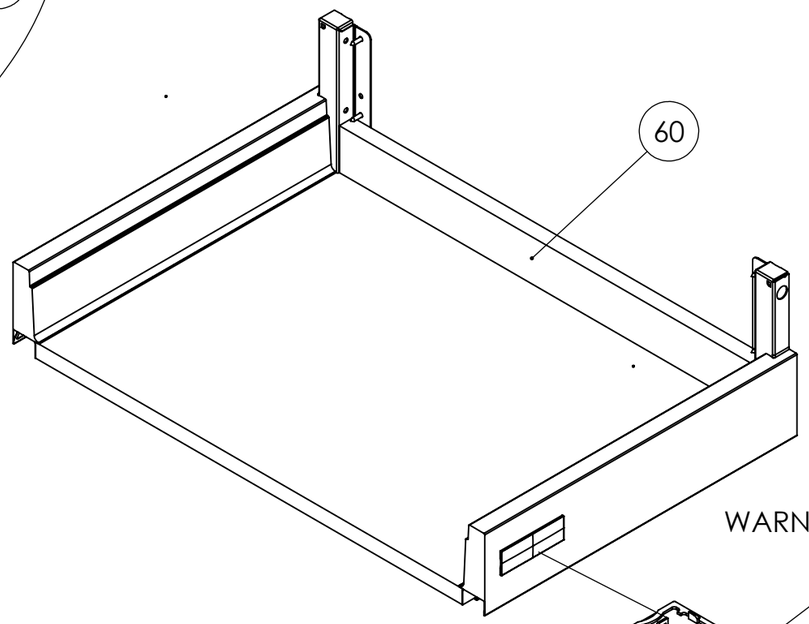


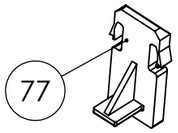


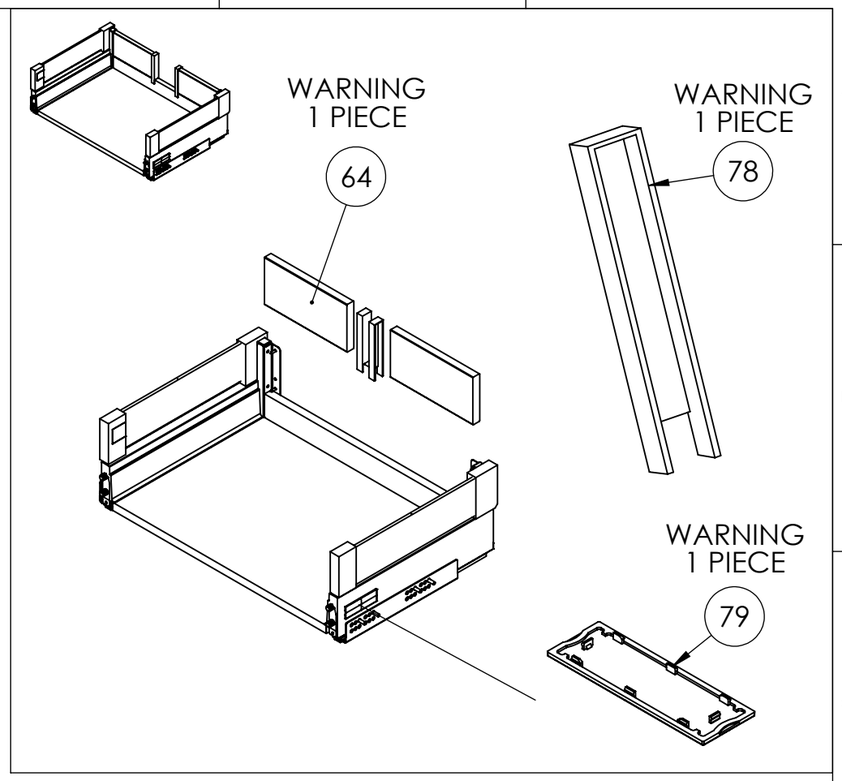


WARNING 1 PIECE

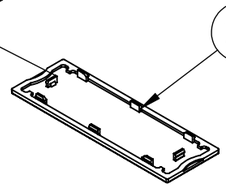


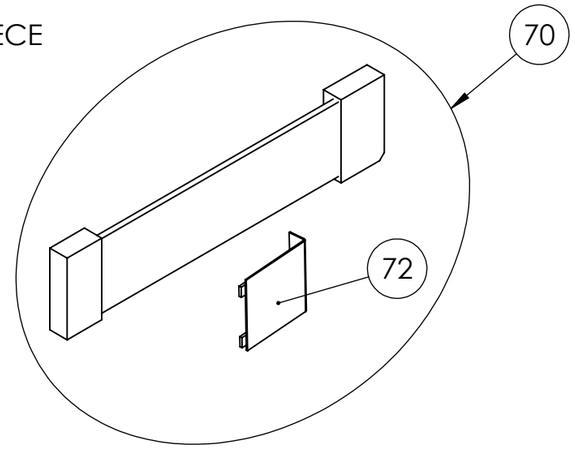


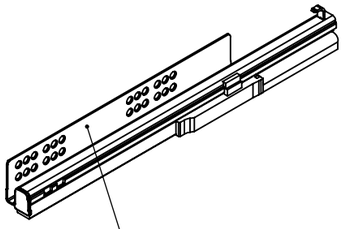


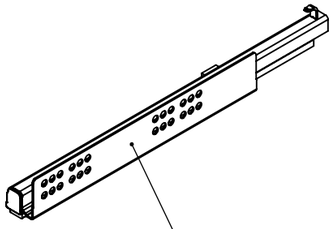


| | | | |
|---|---|---|---|
| MATERIAL: Träger 50 | | DO NOT SCALE DRAWING | SHEET 2 OF 3 |
| SURFACE: | | TITLE: SAV 36 NEO LINE 2 TIROIRS 2 PORTES H64 | E |
| LINEAR TOLERANCE: - mm<br>ANGULAR TOLERANCE: - deg | | | |
| WEIGHT: g | | DESCRIPTION: NEO TIROIR HAUT | |
| SCALE: 1:10 | UNIT: mm / FORMAT: A3 | | |
| AUTOR: C.Dormegnie | CHECKER: C.Dormegnie | | |
| STATUS: APPROVED | | This drawing is the exclusive property of **ADEO**. Any reproduction in part or whole without the written permition of **ADEO** is prohibited. | |
| DATE: 01/12/2020 | | | |

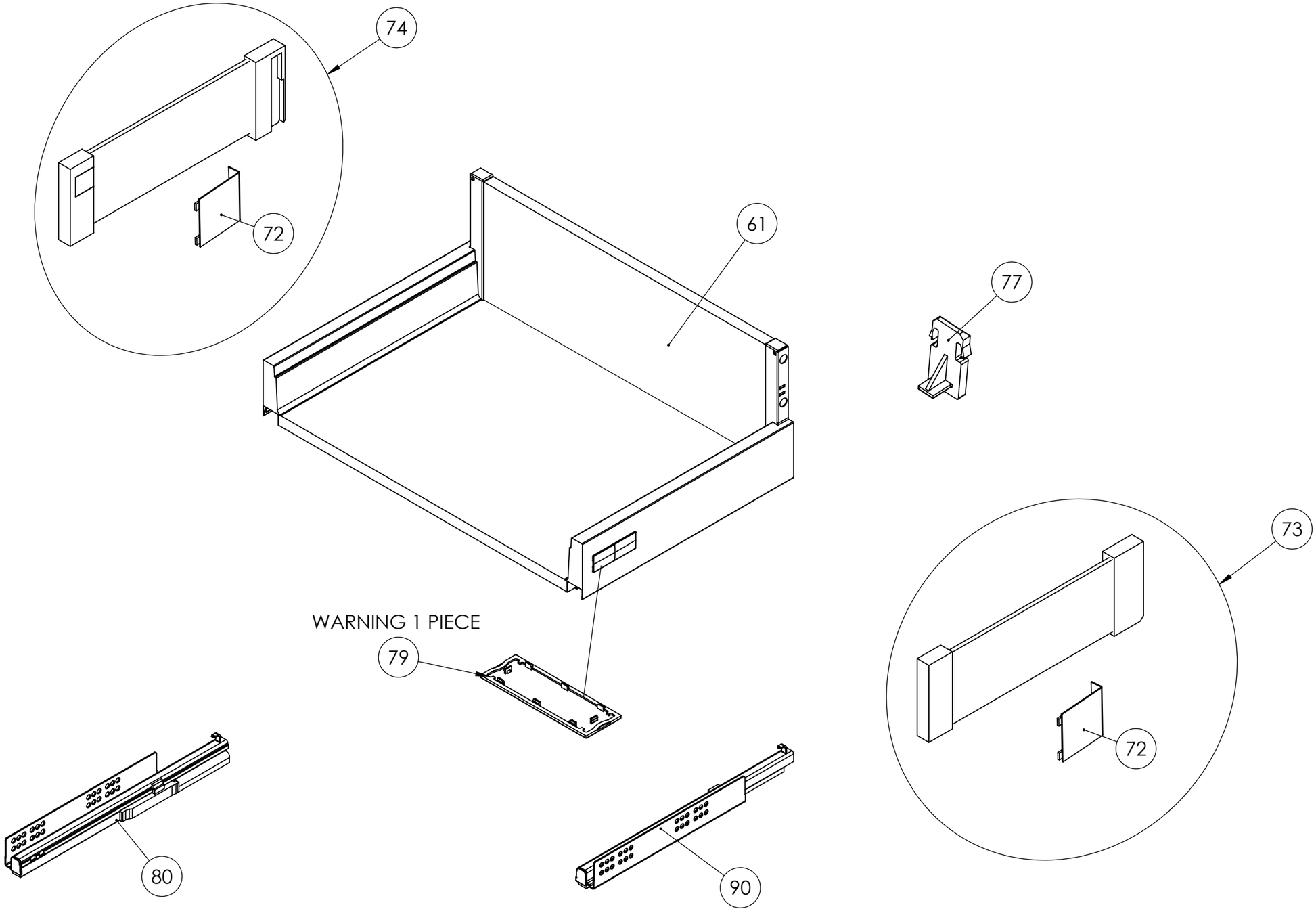


| | | | |
|---|---|---|---|
| MATERIAL: | Träger 50 | DO NOT SCALE DRAWING | SHEET 3 OF 3 |
| SURFACE: | | TITLE: SAV 36 NEO LINE 2 TIROIRS 2 PORTES H64 | E |
| LINEAR TOLERANCE: - mm<br>ANGULAR TOLERANCE: - deg | | | |
| WEIGHT: g | | DESCRIPTION: NEO TIROIR BAS | |
| SCALE: 1:10 | UNIT: mm / FORMAT: A3 | | |
| AUTOR: C.Dormegnie | CHECKER: C.Dormegnie | | |
| STATUS: | APPROVED | This drawing is the exclusive property of **ADEO**. Any reproduction in part or whole without the written permition of **ADEO** is prohibited. | |
| DATE: 01/12/2020 | | | |

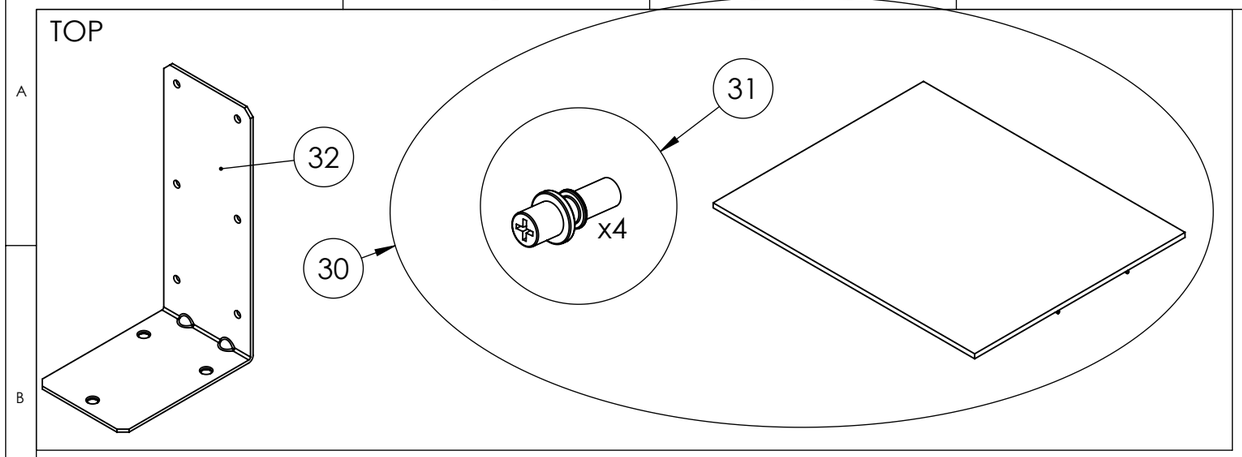


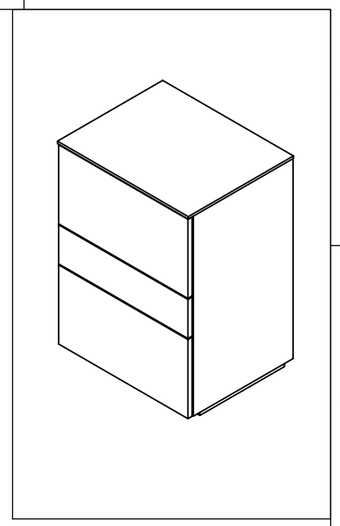

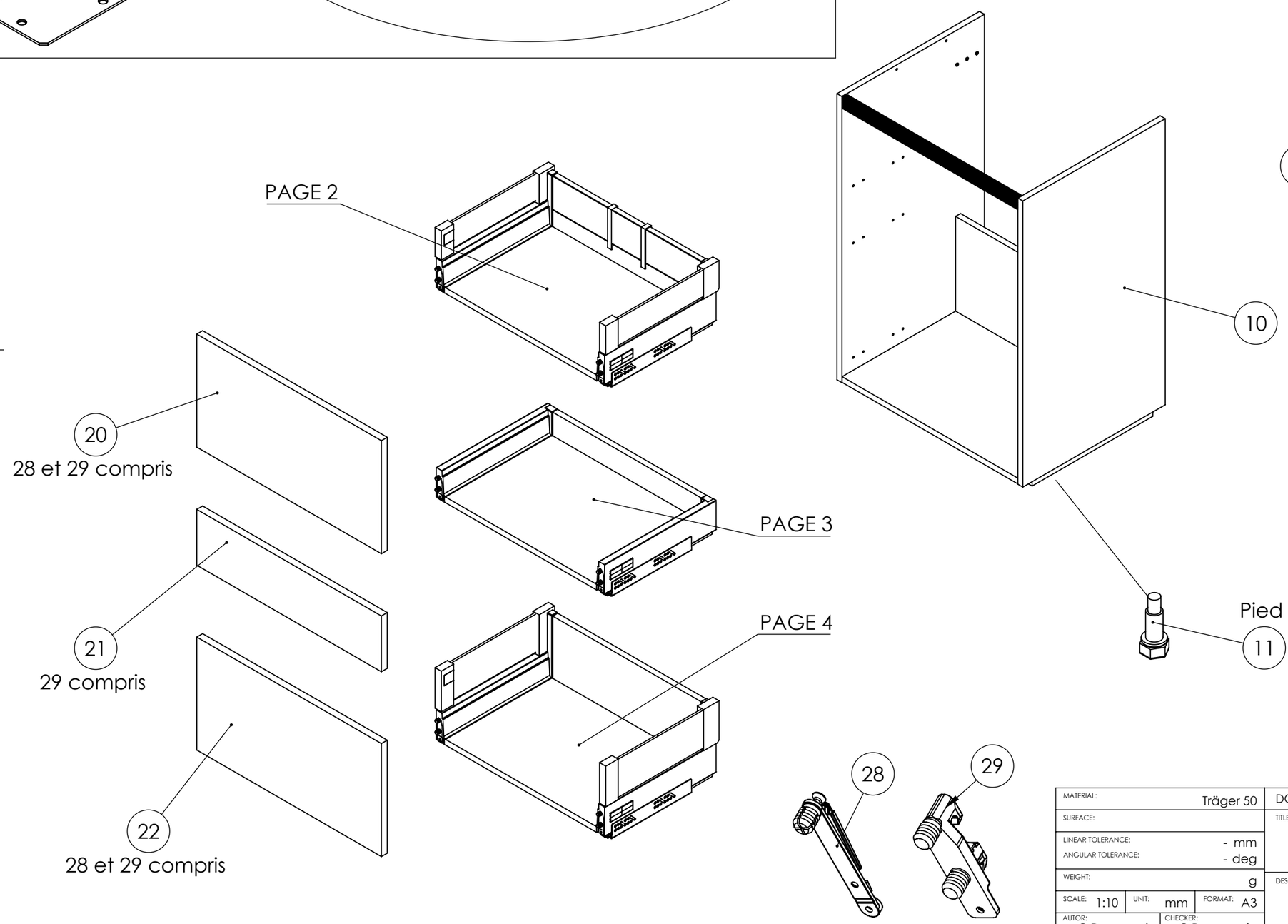


| | | | |
|---|---|---|---|
| MATERIAL: Träger 50 | | DO NOT SCALE DRAWING | SHEET 1 OF 4 |
| SURFACE: | | TITLE: SAV 40 NEO LINE 3 TIROIRS H84 | C |
| LINEAR TOLERANCE: - mm<br>ANGULAR TOLERANCE: - deg | | | |
| WEIGHT: g | | DESCRIPTION: NEO LINE - 3 TIROIRS | |
| SCALE: 1:10 | UNIT: mm / FORMAT: A3 | | |
| AUTOR: C.Dormegnie | CHECKER: C.Dormegnie | | |
| STATUS: APPROVED | | | |
| DATE: 06/04/2021 | | This drawing is the exclusive property of **ADEO**. Any reproduction in part or whole without the written permition of **ADEO** is prohibited. | adeo |

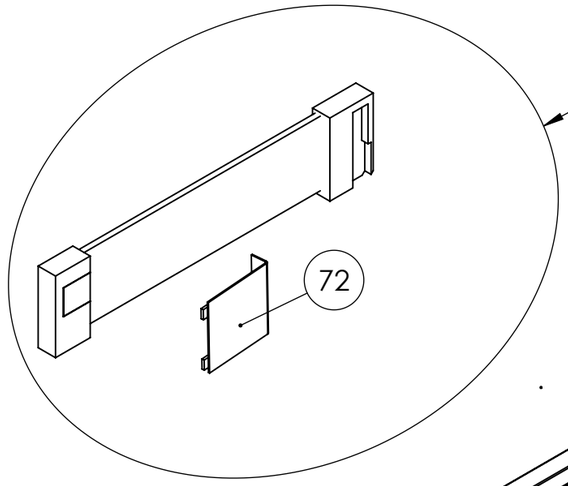


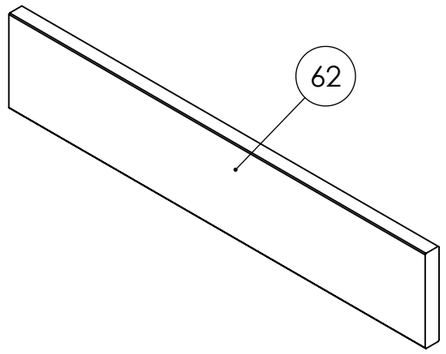


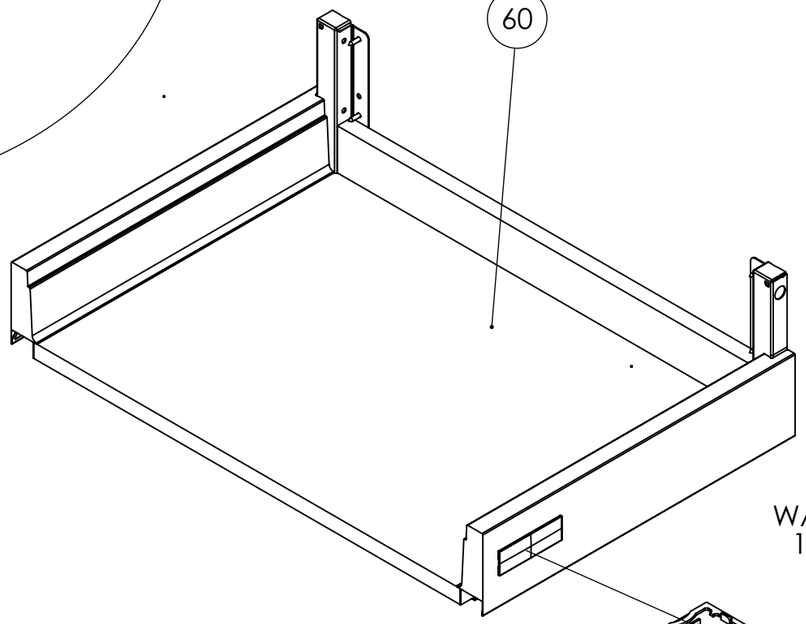


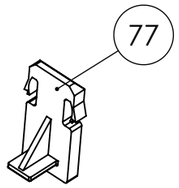


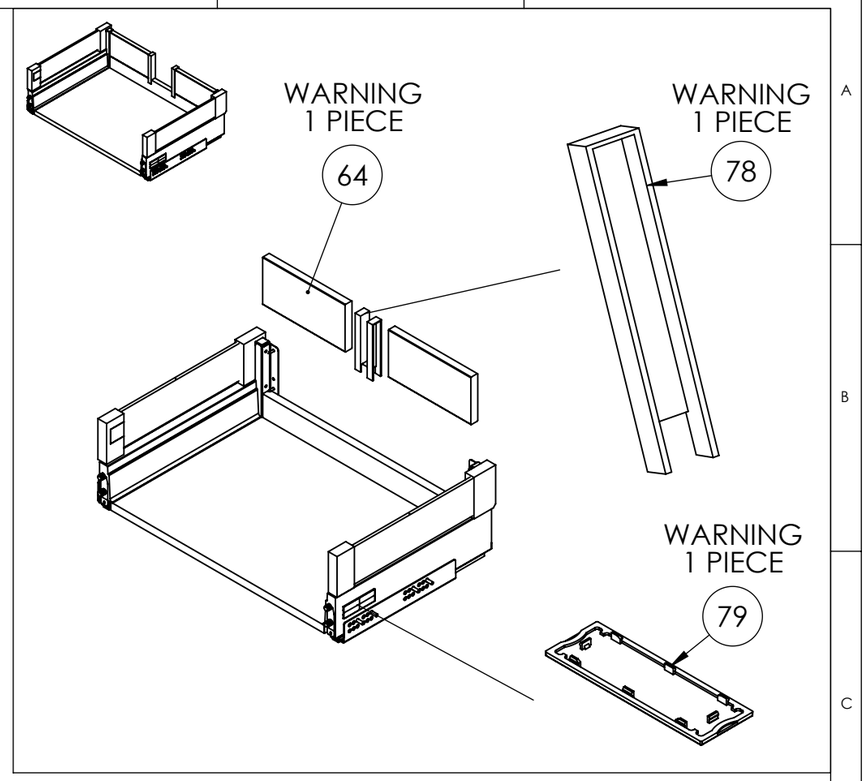


WARNING
1 PIECE




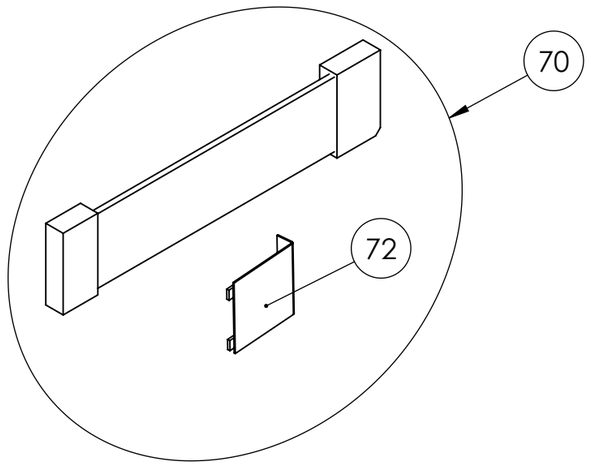


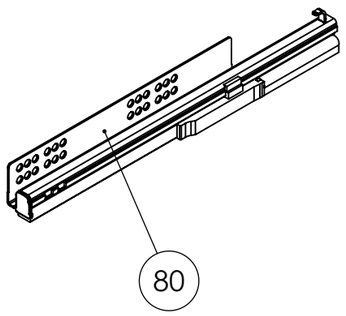


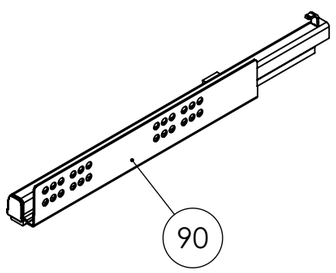


| | | | |
|---|---|---|---|
| MATERIAL: Träger 50 | | DO NOT SCALE DRAWING | SHEET 2 OF 4 |
| SURFACE: | | TITLE: SAV 40 NEO LINE 3 TIROIRS H84 | C |
| LINEAR TOLERANCE: - mm<br>ANGULAR TOLERANCE: - deg | | | |
| WEIGHT: g | | DESCRIPTION: NEO TIROIR HAUT | |
| SCALE: 1:10 | UNIT: mm / FORMAT: A3 | | |
| AUTOR: C.Dormegnie | CHECKER: C.Dormegnie | | |
| STATUS: APPROVED | | This drawing is the exclusive property of **ADEO**. Any reproduction in part or whole without the written permition of **ADEO** is prohibited. | |
| DATE: 06/04/2021 | | | |

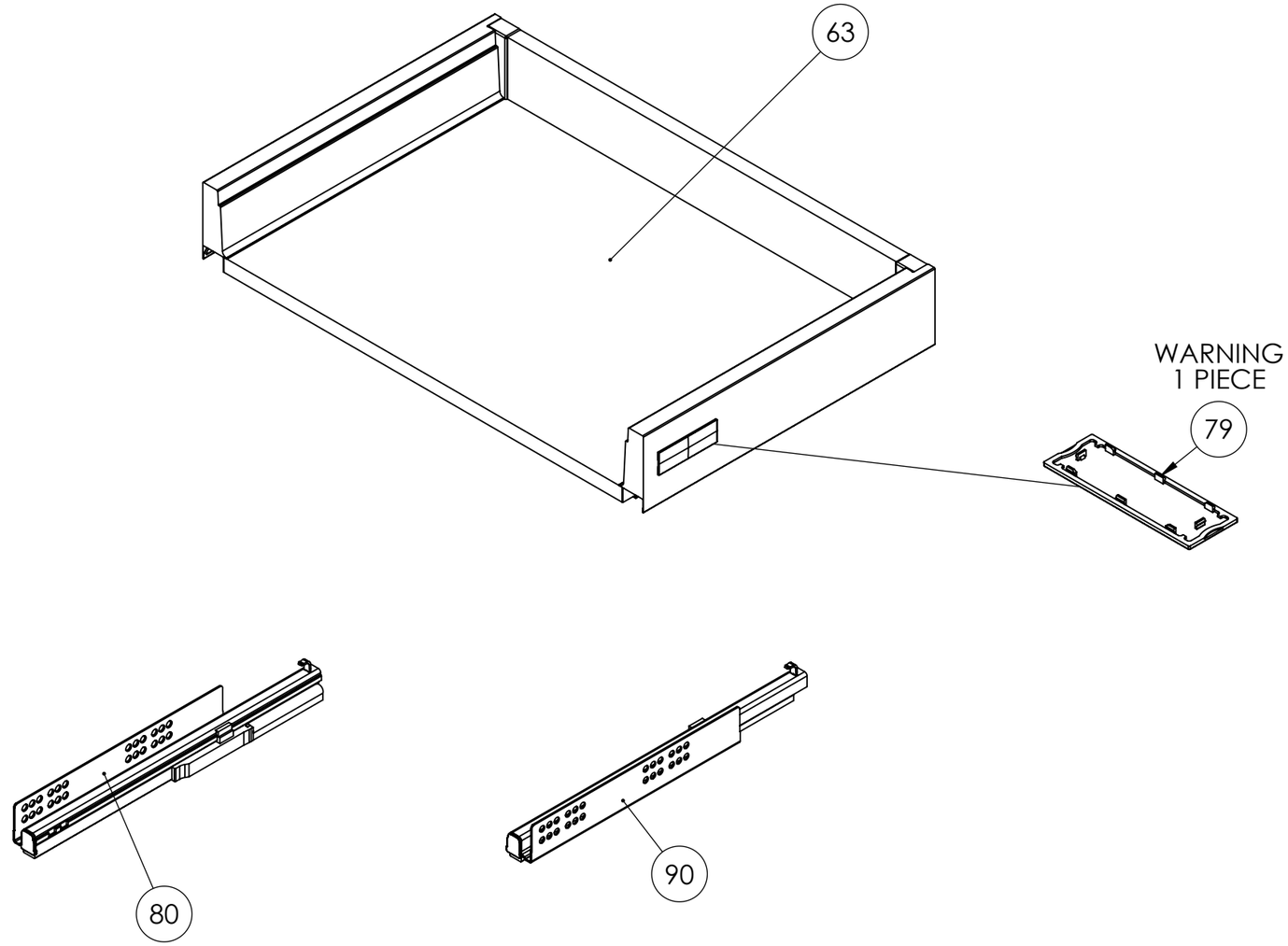


| | | | |
|---|---|---|---|
| MATERIAL: Träger 50 | | DO NOT SCALE DRAWING | SHEET 3 OF 4 |
| SURFACE: | | TITLE: SAV 40 NEO LINE 3 TIROIRS H84 | C |
| LINEAR TOLERANCE: - mm<br>ANGULAR TOLERANCE: - deg | | | |
| WEIGHT: g | | DESCRIPTION: NEO TIROIR MILIEU | |
| SCALE: 1:10 | UNIT: mm / FORMAT: A3 | | |
| AUTOR: C.Dormegnie | CHECKER: C.Dormegnie | | |
| STATUS: APPROVED | | | |
| DATE: 06/04/2021 | | | |

This drawing is the exclusive property of **ADEO**.
Any reproduction in part or whole without the written permition of **ADEO** is prohibited.

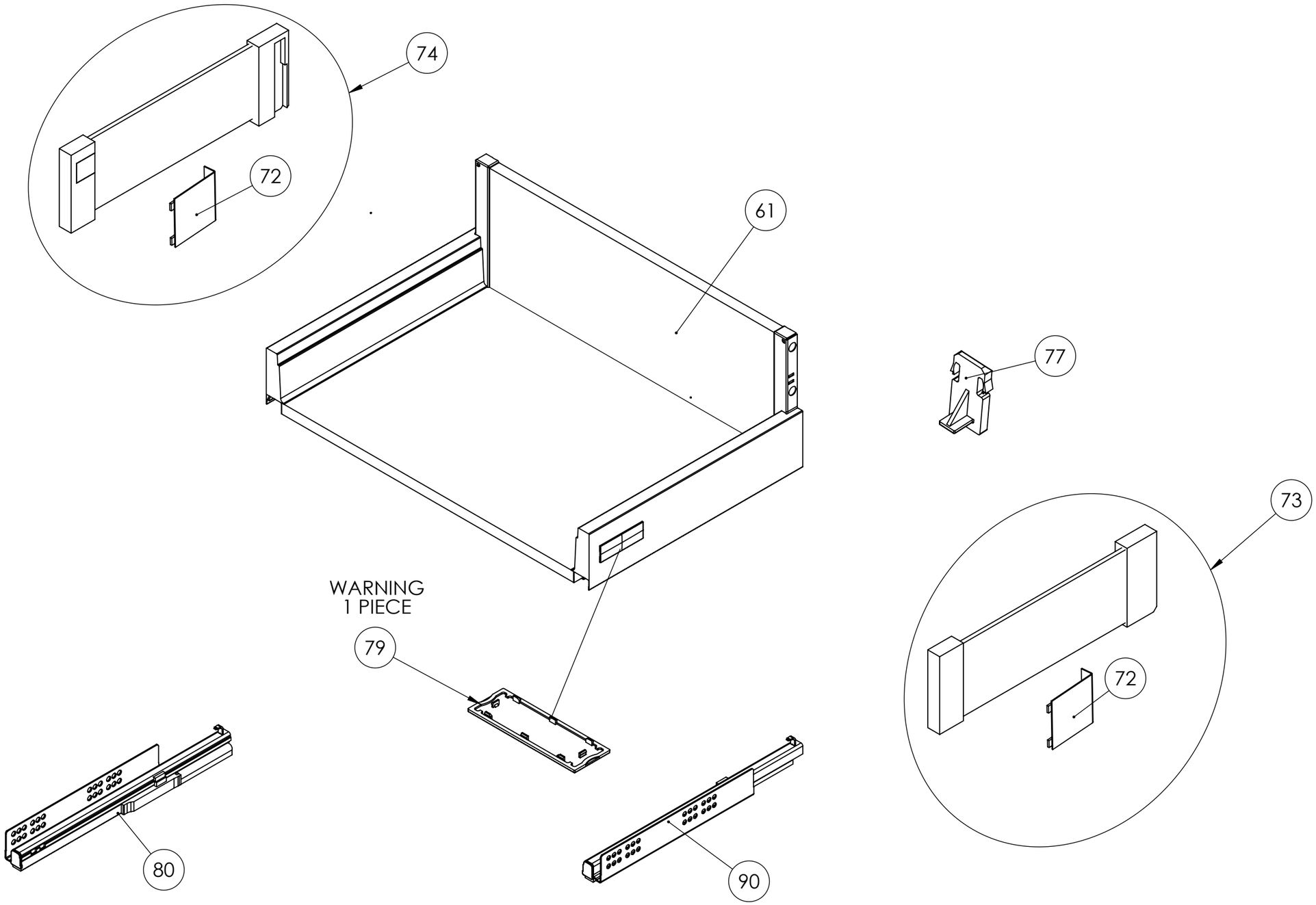


| | | | |
|---|---|---|---|
| MATERIAL: Träger 50 | | DO NOT SCALE DRAWING | SHEET 4 OF 4 |
| SURFACE: | | TITLE: SAV 40 NEO LINE 3 TIROIRS H84 | C |
| LINEAR TOLERANCE: - mm<br>ANGULAR TOLERANCE: - deg | | | |
| WEIGHT: g | | DESCRIPTION: NEO TIROIR BAS | |
| SCALE: 1:10 | UNIT: mm / FORMAT: A3 | | |
| AUTOR: C.Dormegnie | CHECKER: C.Dormegnie | | |
| STATUS: APPROVED | | | |
| DATE: 06/04/2021 | | | |

This drawing is the exclusive property of **ADEO**.
Any reproduction in part or whole without the written permition of **ADEO** is prohibited.

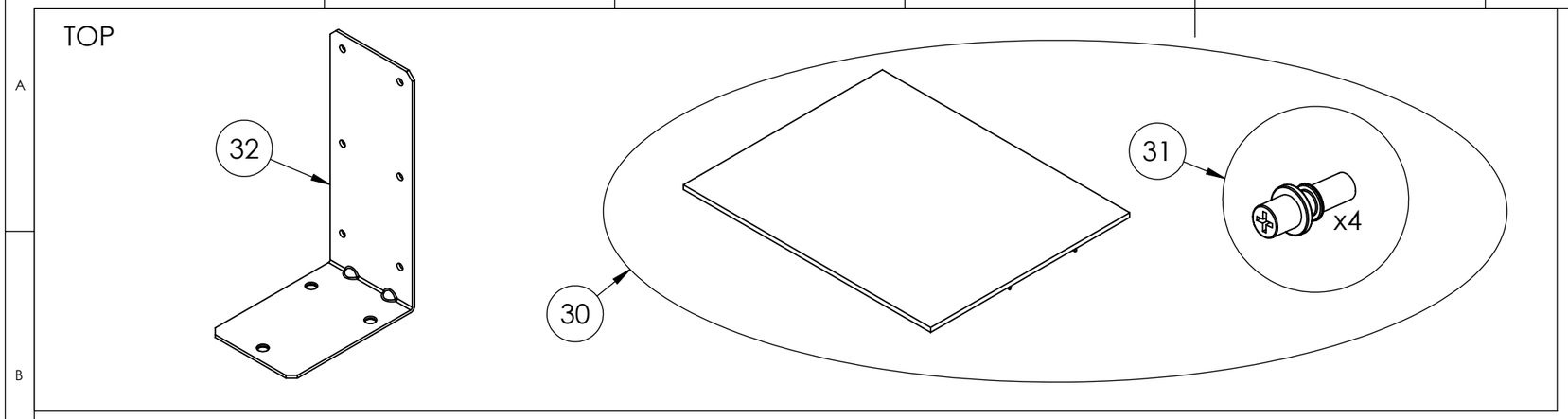


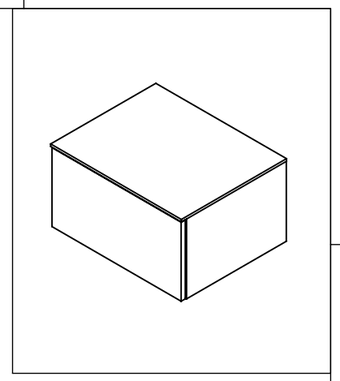

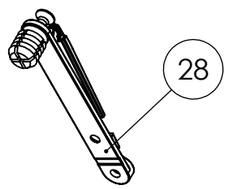


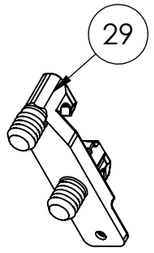


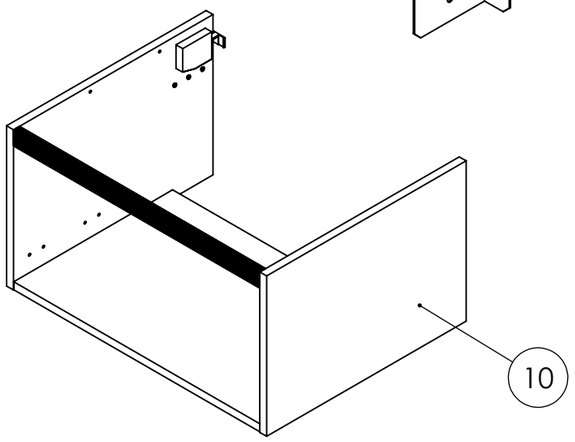


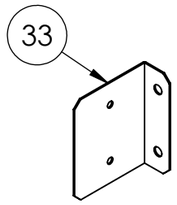


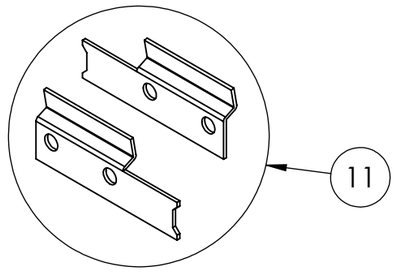


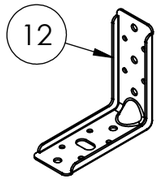


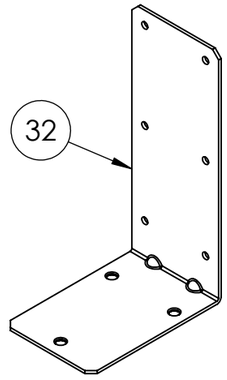


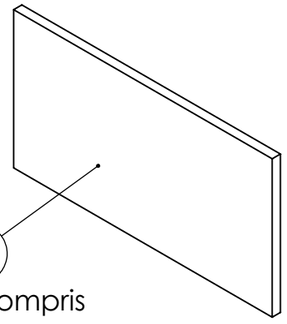


28 et 29 compris

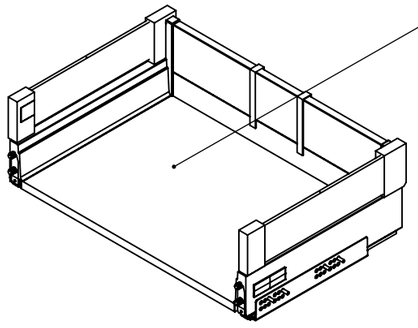

PAGE 2

| | | | |
|---|---|---|---|
| MATERIAL: Träger 50 | | DO NOT SCALE DRAWING | SHEET 1 OF 2 |
| SURFACE: | | TITLE: SAV 50 NEO LINE 1 TIROIR H32 | B |
| LINEAR TOLERANCE: - mm<br>ANGULAR TOLERANCE: - deg | | | |
| WEIGHT: g | | DESCRIPTION: NEO LINE - 1 TIROIR | |
| SCALE: 1:10 | UNIT: mm / FORMAT: A3 | | |
| AUTOR: C.Dormegnie | CHECKER: C.Dormegnie | | |
| STATUS: APPROVED | | | |
| DATE: 02/12/2020 | | | |

This drawing is the exclusive property of **ADEO**.
Any reproduction in part or whole without the written permition of **ADEO** is prohibited.

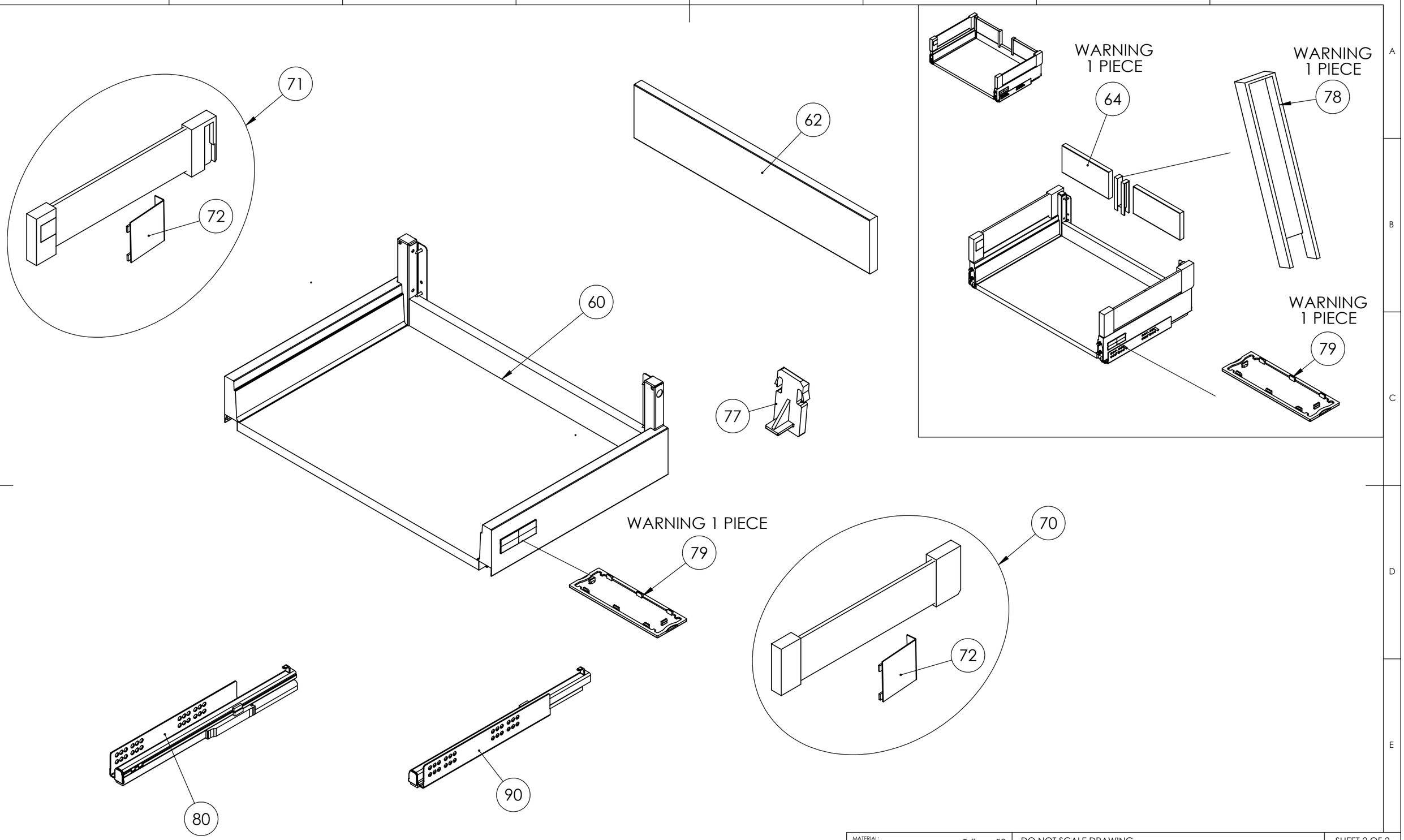


| | | | |
|---|---|---|---|
| MATERIAL: Träger 50 | | DO NOT SCALE DRAWING | SHEET 2 OF 2 |
| SURFACE: | | TITLE: SAV 50 NEO LINE 1 TIROIR H32 | B |
| LINEAR TOLERANCE: - mm<br>ANGULAR TOLERANCE: - deg | | | |
| WEIGHT: g | | DESCRIPTION: NEO TIROIR | |
| SCALE: 1:10 | UNIT: mm / FORMAT: A3 | | |
| AUTOR: C.Dormegnie | CHECKER: C.Dormegnie | | |
| STATUS: APPROVED | | This drawing is the exclusive property of **ADEO**. Any reproduction in part or whole without the written permition of **ADEO** is prohibited. | |
| DATE: 02/12/2020 | | | |

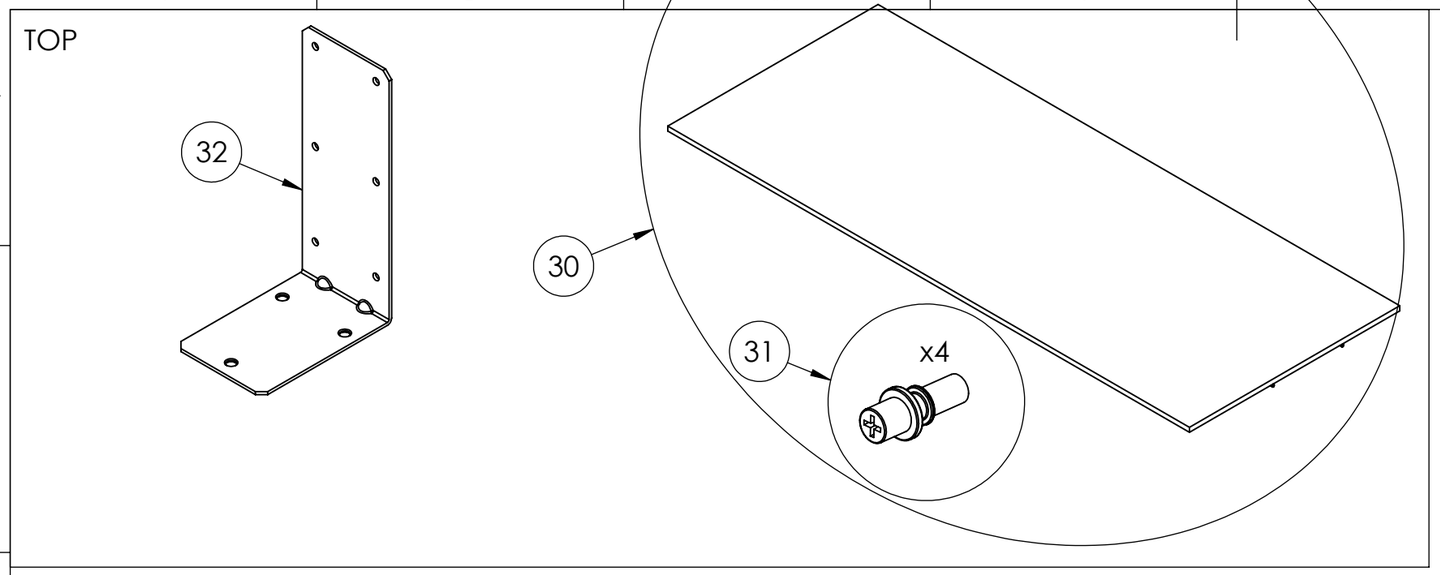


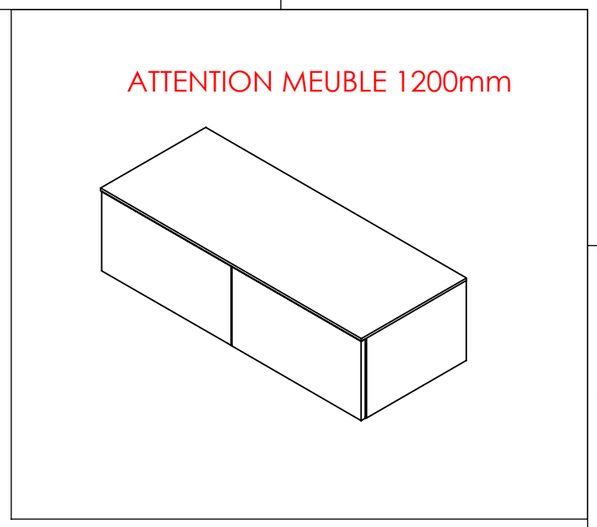


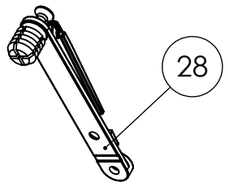


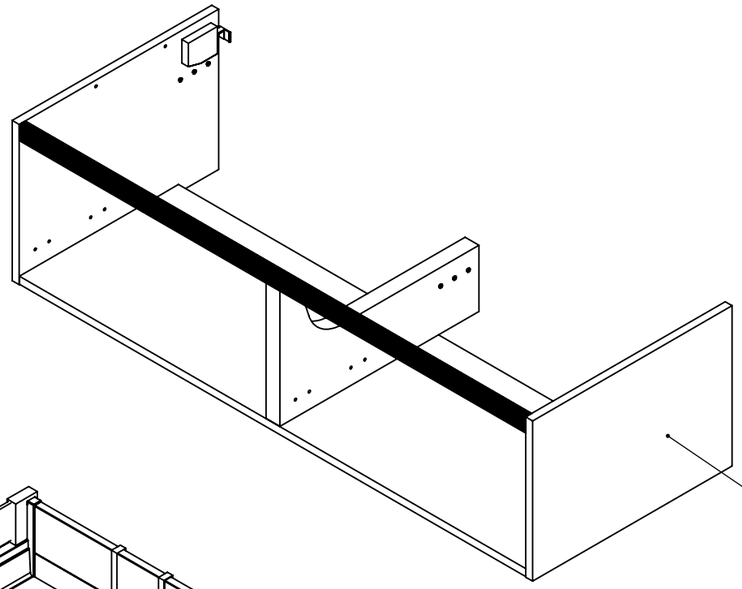


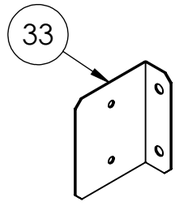


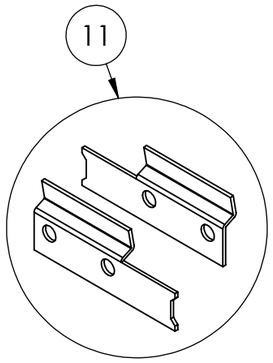

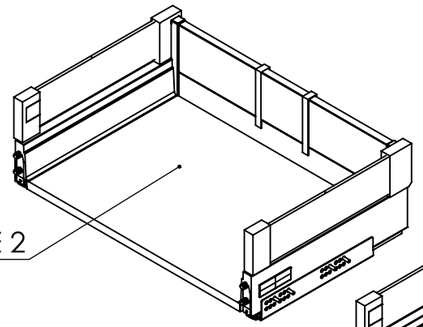


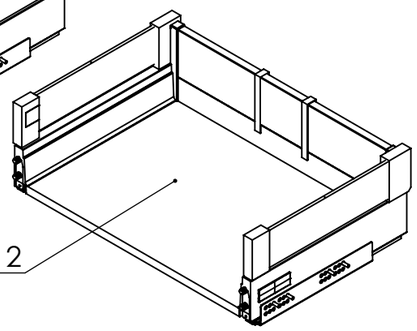


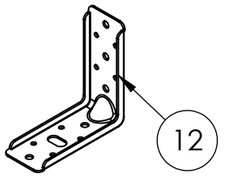


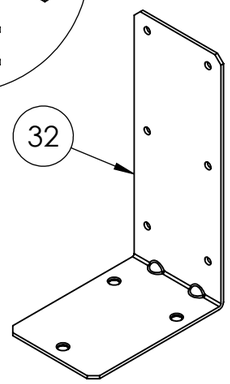


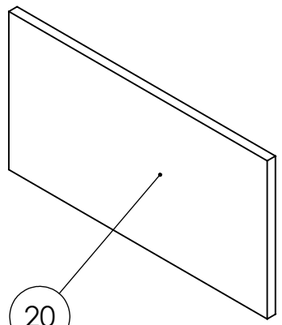


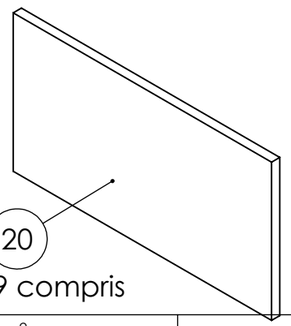


| | | | |
|---|---|---|---|
| MATERIAL: Träger 50 | | DO NOT SCALE DRAWING | SHEET 1 OF 2 |
| SURFACE: | | TITLE: SAV 51 NEO LINE 2 TIROIRS H32 | C |
| LINEAR TOLERANCE: - mm<br>ANGULAR TOLERANCE: - deg | | | |
| WEIGHT: g | | DESCRIPTION: NEO LINE - 2 TIROIRS 1200mm | |
| SCALE: 1:10 | UNIT: mm / FORMAT: A3 | | |
| AUTOR: C.Dormegnie | CHECKER: C.Dormegnie | | |
| STATUS: APPROVED | | This drawing is the exclusive property of **ADEO**. Any reproduction in part or whole without the written permition of **ADEO** is prohibited. | |
| DATE: 27/10/2020 | | | |

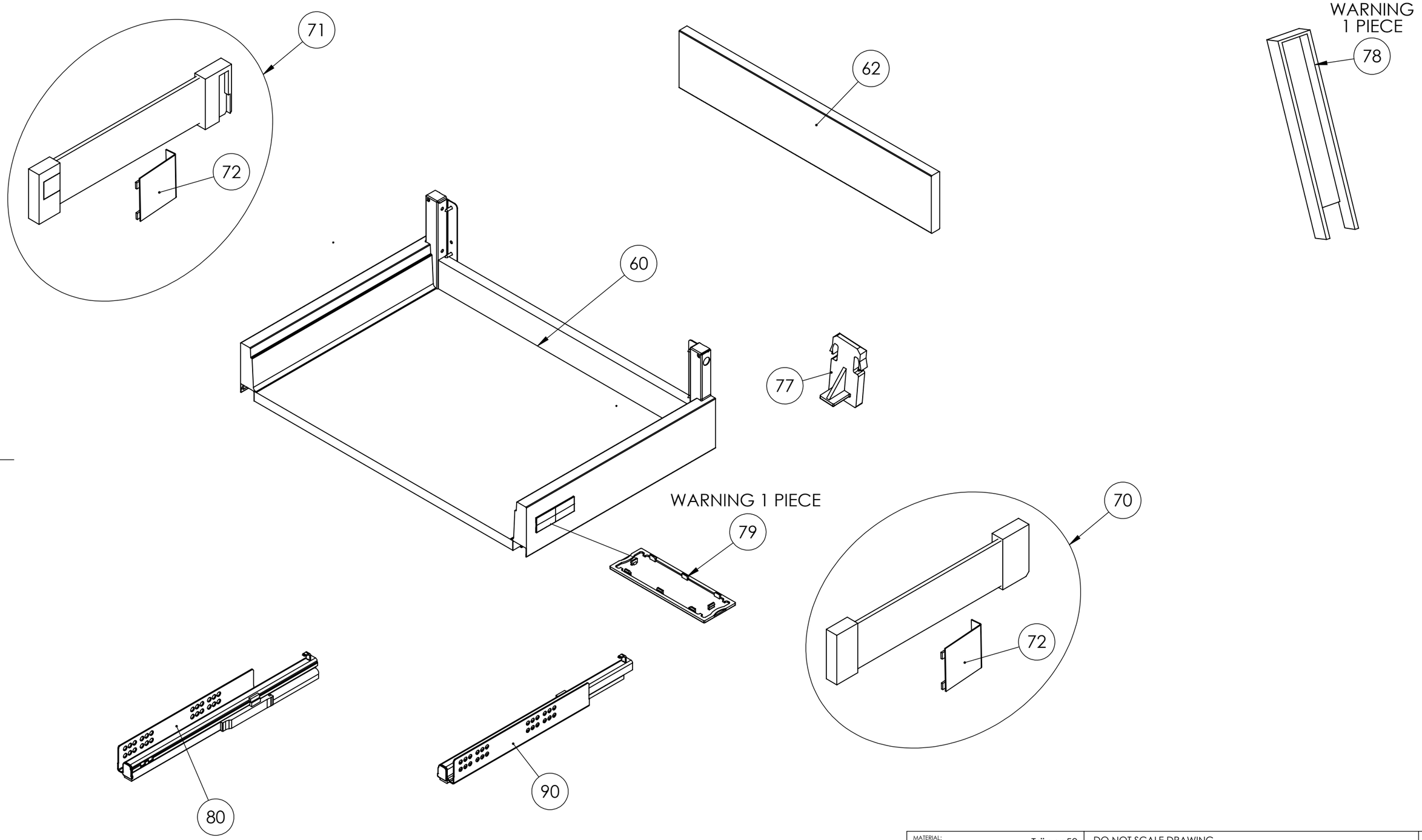


| | | | |
|---|---|---|---|
| MATERIAL: Träger 50 | | DO NOT SCALE DRAWING | SHEET 2 OF 2 |
| SURFACE: | | TITLE: SAV 51 NEO LINE 2 TIROIRS H32 | C |
| LINEAR TOLERANCE: - mm<br>ANGULAR TOLERANCE: - deg | | | |
| WEIGHT: g | | DESCRIPTION: NEO TIROIR | |
| SCALE: 1:10 | UNIT: mm / FORMAT: A3 | | |
| AUTOR: C.Dormegnie | CHECKER: C.Dormegnie | | |
| STATUS: APPROVED | | This drawing is the exclusive property of **ADEO**. Any reproduction in part or whole without the written permition of **ADEO** is prohibited. | |
| DATE: 27/10/2020 | | | |

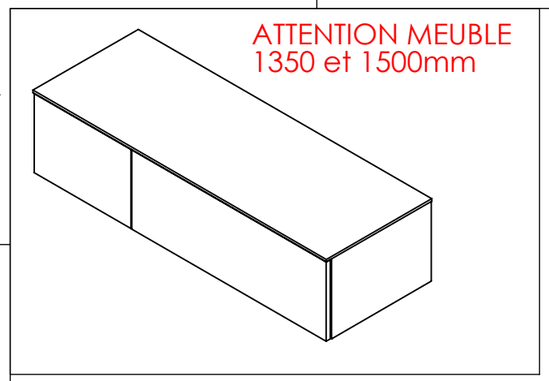


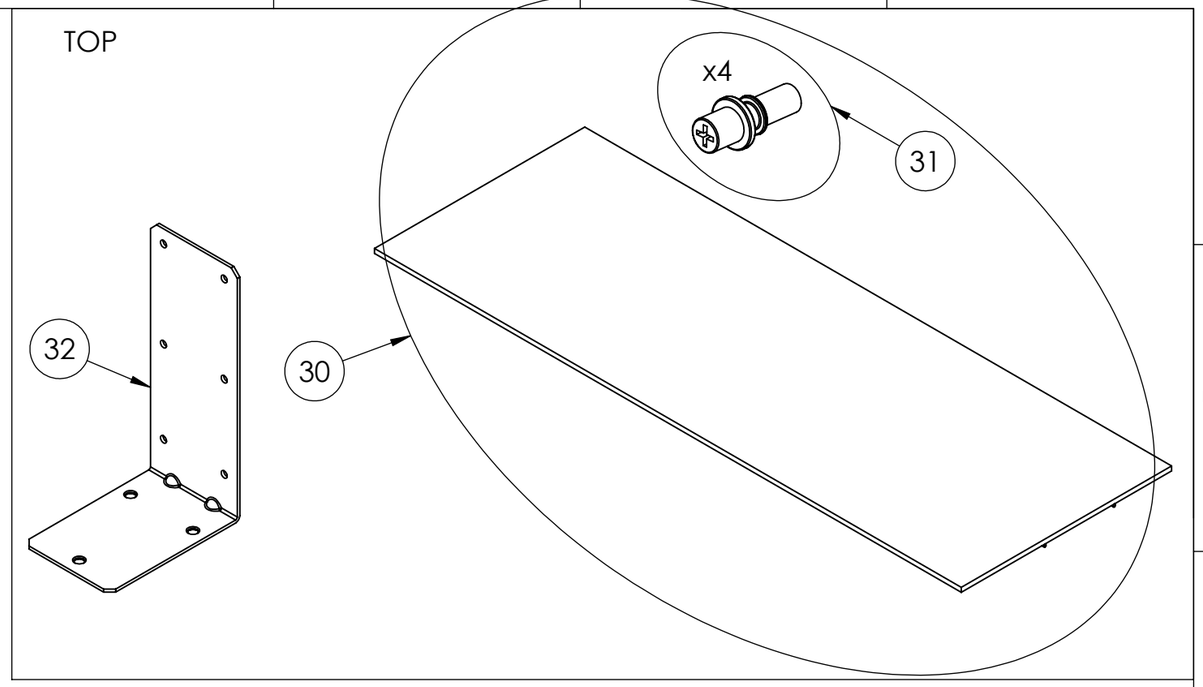


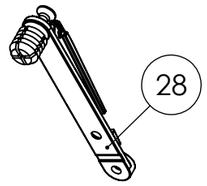


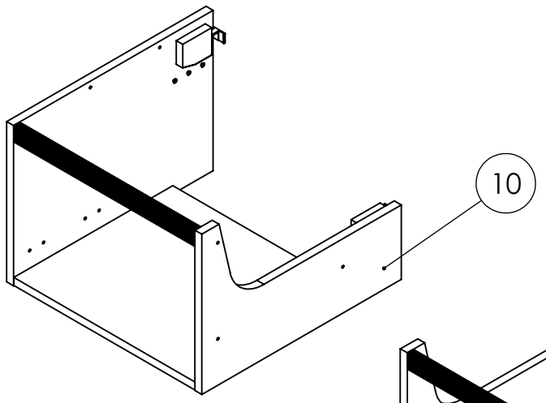


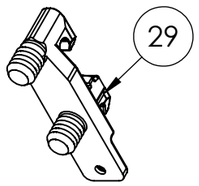


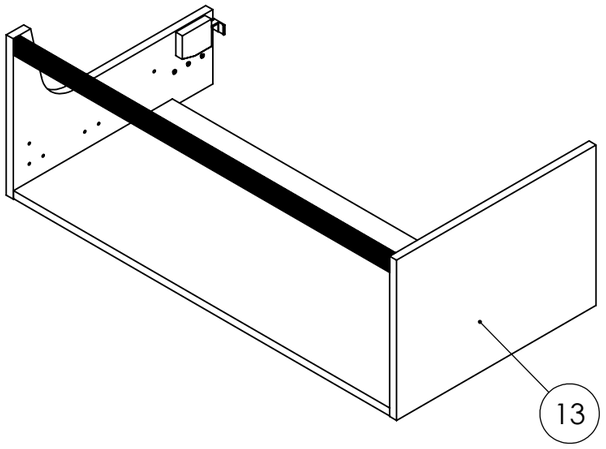


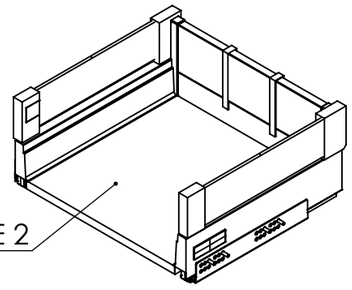


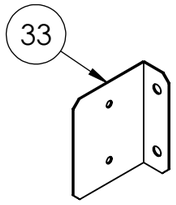


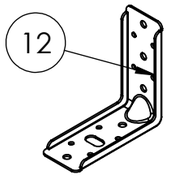


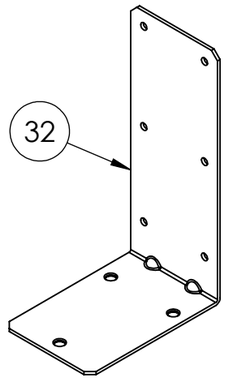


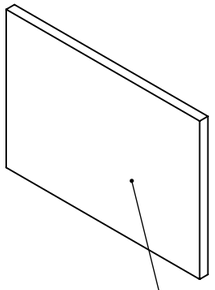


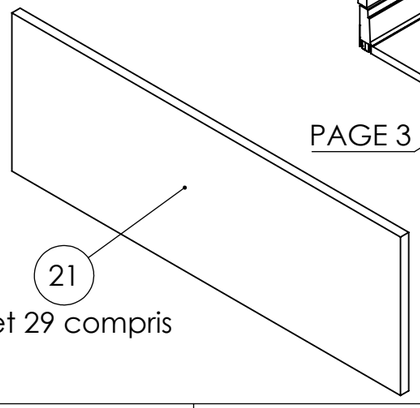


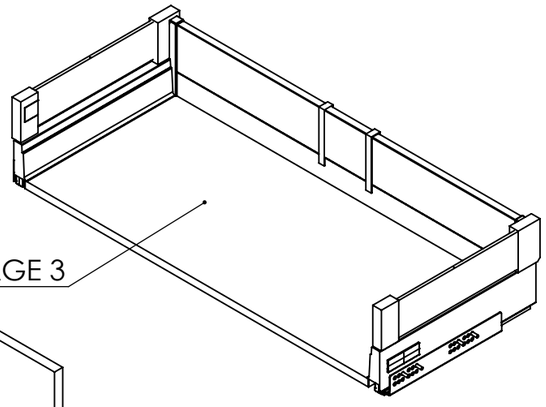


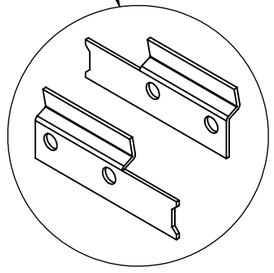


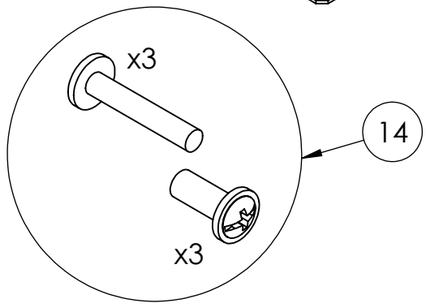


| | | | |
|---|---|---|---|
| MATERIAL: Träger 50 | | DO NOT SCALE DRAWING | SHEET 1 OF 3 |
| SURFACE: | | TITLE: SAV 52 NEO LINE 2 TIROIRS H32 | B |
| LINEAR TOLERANCE: - mm<br>ANGULAR TOLERANCE: - deg | | | |
| WEIGHT: g | | DESCRIPTION: NEO LINE - 2 TIROIRS 1350 ET 1500mm | |
| SCALE: 1:10 | UNIT: mm / FORMAT: A3 | | |
| AUTOR: C.Dormegnie | CHECKER: C.Dormegnie | | |
| STATUS: APPROVED | | | |
| DATE: 03/11/2020 | | | |

This drawing is the exclusive property of **ADEO**.
Any reproduction in part or whole without the written permition of **ADEO** is prohibited.

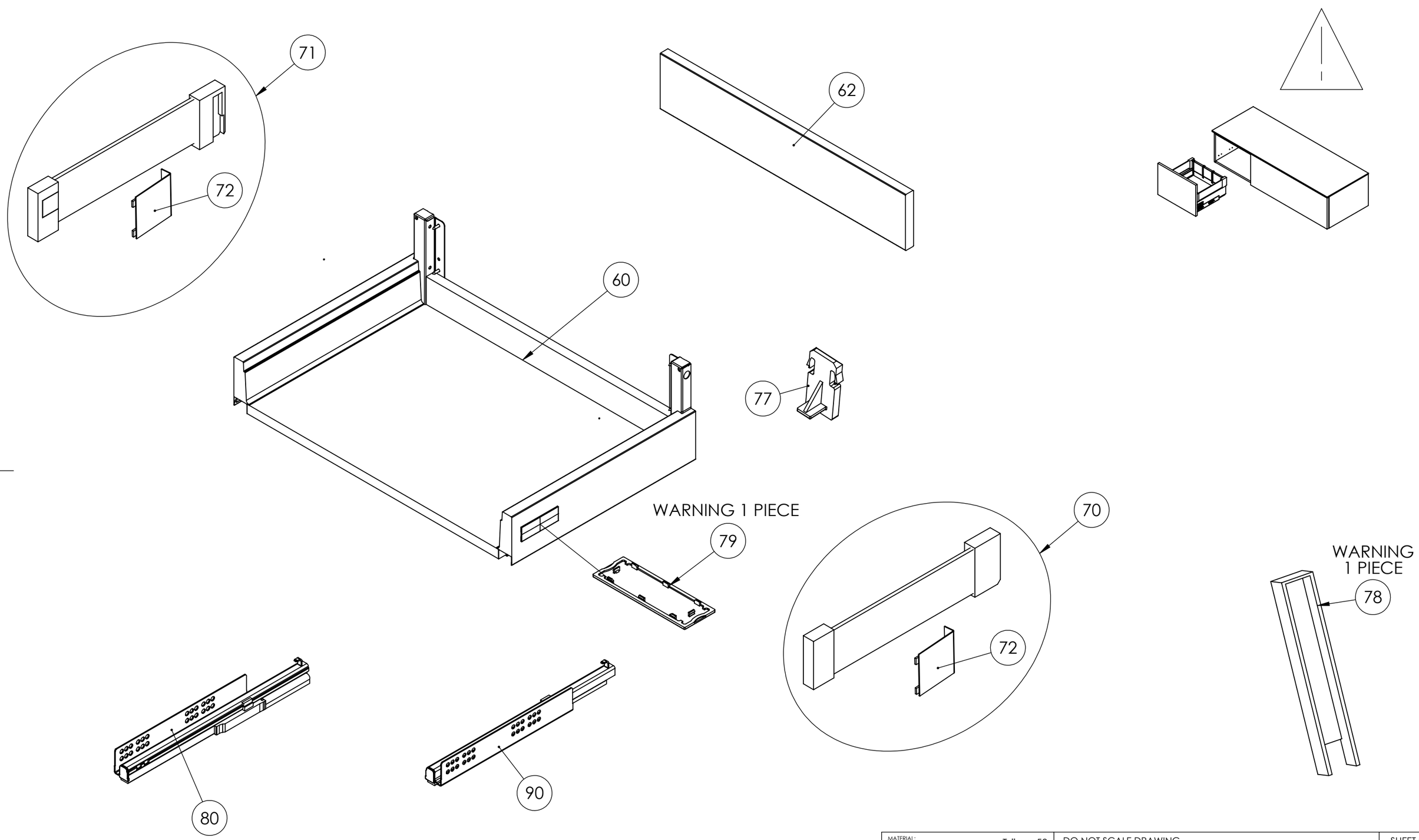


| | | | |
|---|---|---|---|
| MATERIAL: Träger 50 | | DO NOT SCALE DRAWING | SHEET 2 OF 3 |
| SURFACE: | | TITLE: SAV 52 NEO LINE 2 TIROIRS H32 | B |
| LINEAR TOLERANCE: - mm<br>ANGULAR TOLERANCE: - deg | | | |
| WEIGHT: g | | DESCRIPTION: NEO TIROIR GAUCHE | |
| SCALE: 1:10 | UNIT: mm / FORMAT: A3 | | |
| AUTOR: C.Dormegnie | CHECKER: C.Dormegnie | | |
| STATUS: APPROVED | | This drawing is the exclusive property of **ADEO**. Any reproduction in part or whole without the written permition of **ADEO** is prohibited. | |
| DATE: 03/11/2020 | | | |

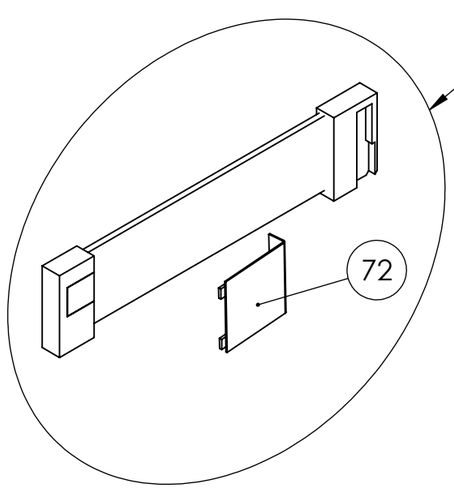


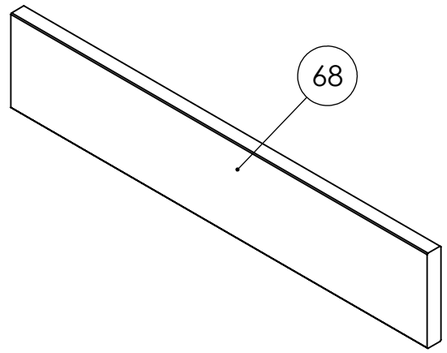


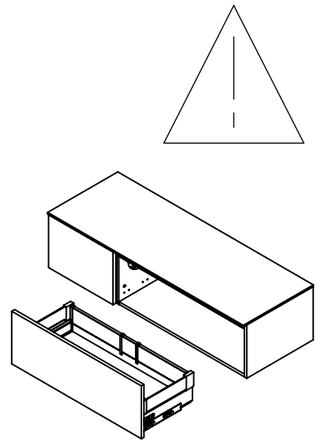

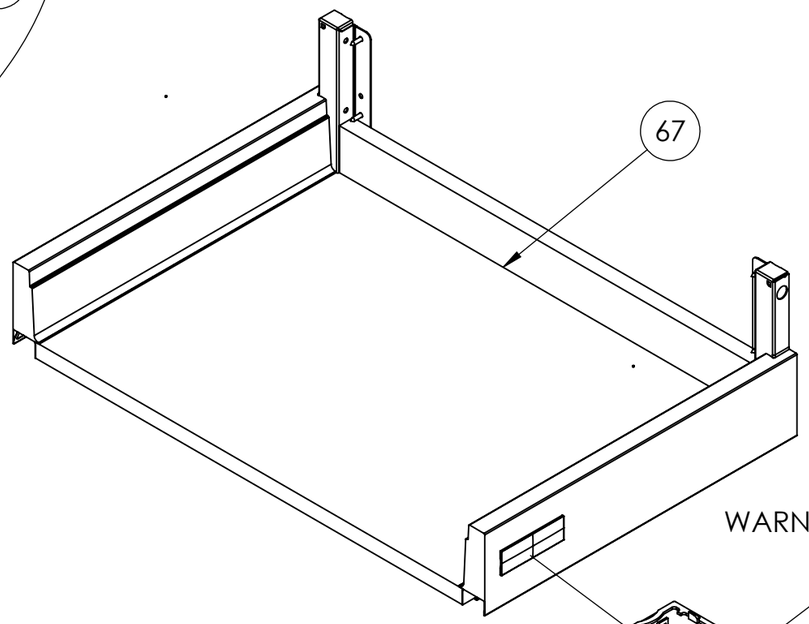


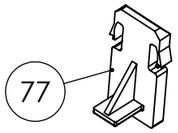


WARNING 1 PIECE

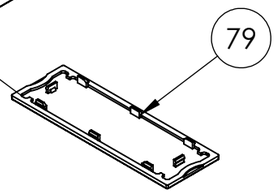


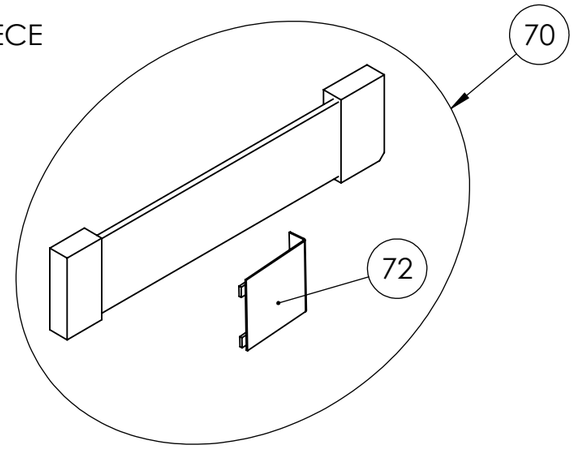


WARNING
1 PIECE

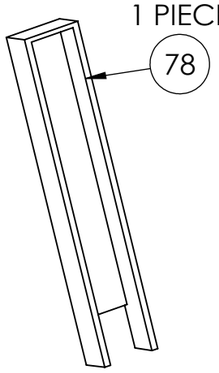


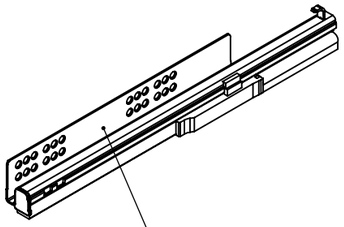


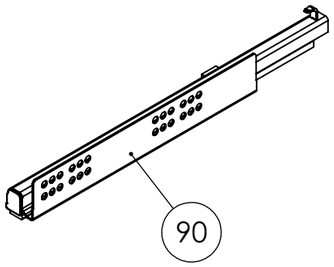


| | | | |
|---|---|---|---|
| MATERIAL: Träger 50 | | DO NOT SCALE DRAWING | SHEET 3 OF 3 |
| SURFACE: | | TITLE: SAV 52 NEO LINE 2 TIROIRS H32 | B |
| LINEAR TOLERANCE: - mm<br>ANGULAR TOLERANCE: - deg | | | |
| WEIGHT: g | | DESCRIPTION: NEO TIROIR DROIT | |
| SCALE: 1:10 | UNIT: mm / FORMAT: A3 | | |
| AUTOR: C.Dormegnie | CHECKER: C.Dormegnie | | |
| STATUS: APPROVED | | This drawing is the exclusive property of **ADEO**. Any reproduction in part or whole without the written permition of **ADEO** is prohibited. | |
| DATE: 03/11/2020 | | | |