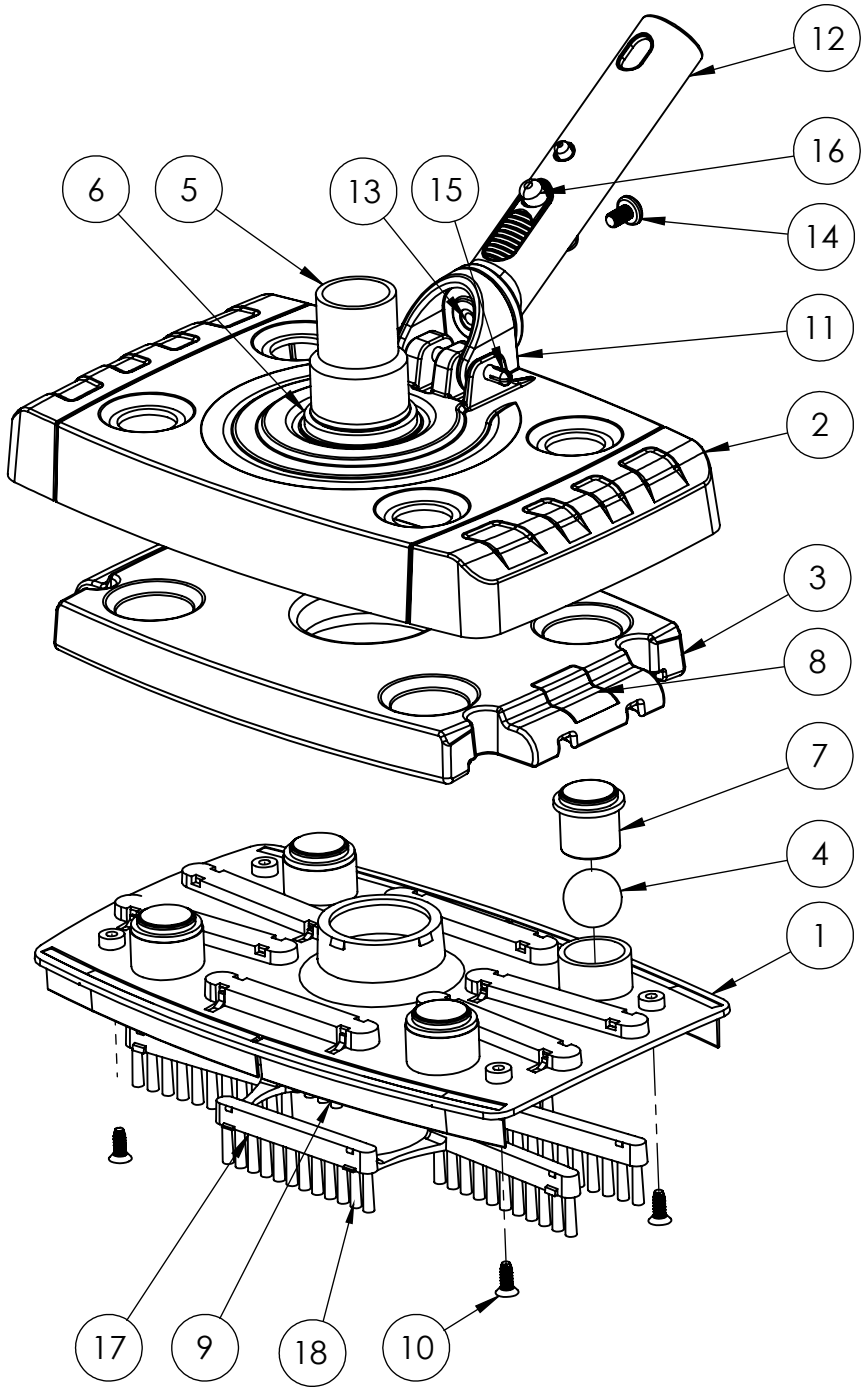

ref.No	Serial number	Name	Quantity	Material	Specification
1	P12188-A	Vacuum body	1	ABS	26.2*16.1*2.6cm
2	P12189-A	Vacuum Cover	1	ABS	26.9*16.7*5.2cm
3	P12217	Vacuum weight body	1	PP	25.2*15.6*2.3cm
4	P12191	Vacuum wheel	1	ABS	2.25x2.25x2.25cm
5	P12186	Vacuum hose adaptor	1	ABS	4.3*4.3*6.2cm
6	P12187	Vacuum adaptor ring	1	PVC	4.8*4.8*0.5cm
7	P12190	Vacuum cap wheel	1	ABS	10.7*2.8*0.8cm
8	P12218	Vacuum weight body cap	1	ABS	2.8*2.8*2.6cm
9	P12192	PVC stripe	1	PVC	1.8*0.4*12.1cm
10		Tread cutting screw	1	SS304	M4 x 13mm
11	P12204	Vacuum handle base	1	ABS	3.9*3.9*3.1cm
12	P12203	Vacuum handle	1	ABS	15.1*3.9*3.6cm
13	P12205	M6 Hex nut	1	SS304	
14	P12209	Pan head machine screw	1	SS304	M6 x 14mm
15		Universal Pin 65mm	1	POM	0.85*0.85*6.3cm
16	P12098	V Quick snap	1	POM	6.2*4.1*0.95cm
17	P12233	Vacuum bristle strip	1	PP	24.4*5*0.9cm
18		Vacuum bristle	-	PP	Φ0.4mm，L36.5mm

GENERAL TOLERANCES:
LINEAR:
ANGULAR:

Rev	NAME	DATE
01		
02		
03		
04		
05		
06		

ADEO - 135, rue Sadi Carnot
CS 00001 - 59790 RONCHIN
FRANCE

MATERIAU/FINISHING:

TITRE:
Promo Small Multi Surface Vacuum

No. DE PLAN
3276000245827

A3
REVISION

ECHELLE: 1:1 (Scale can be adapted) Dimensions in mm FEUILLE 1 SUR 1