SID 500 BOM LIST

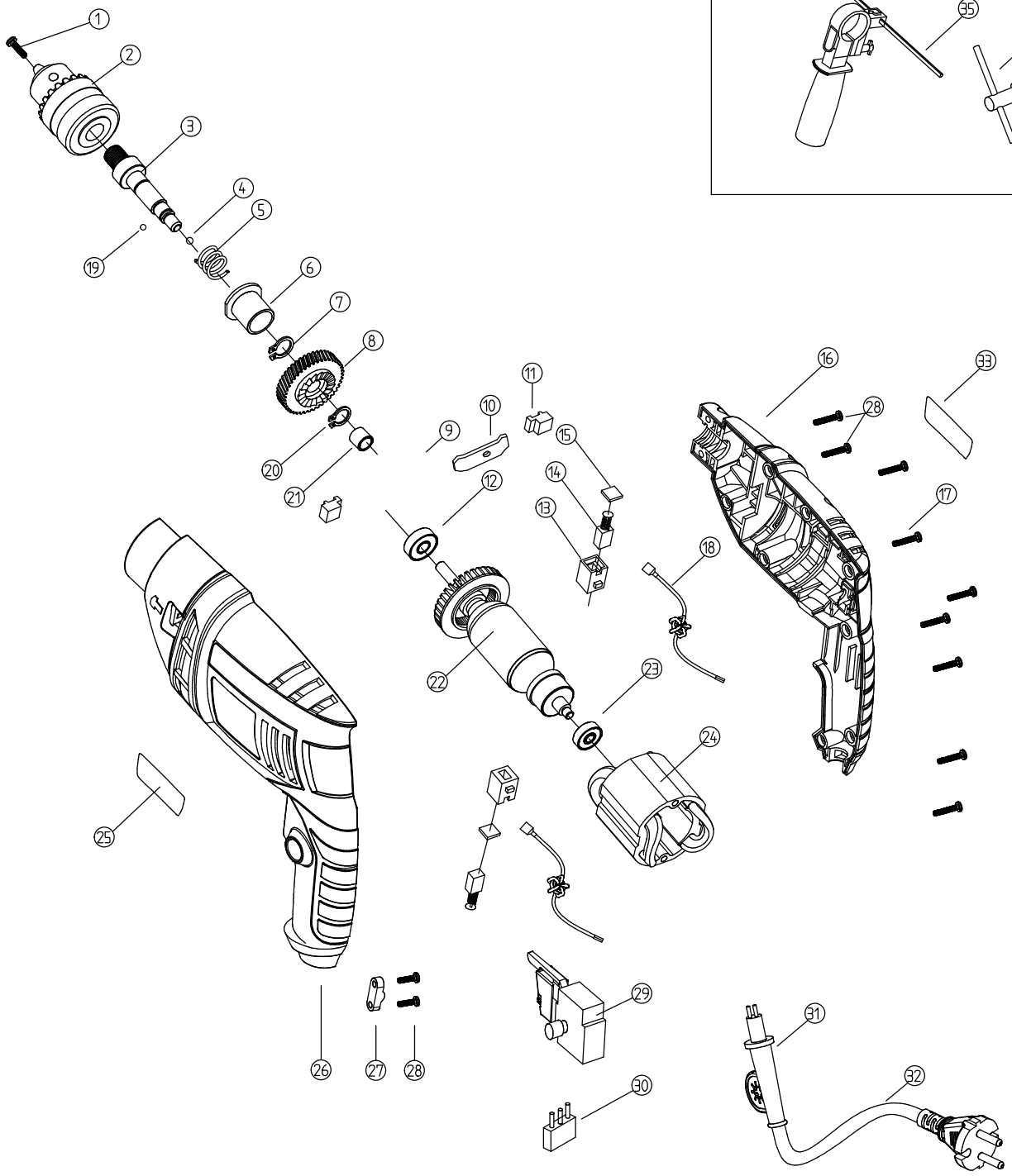

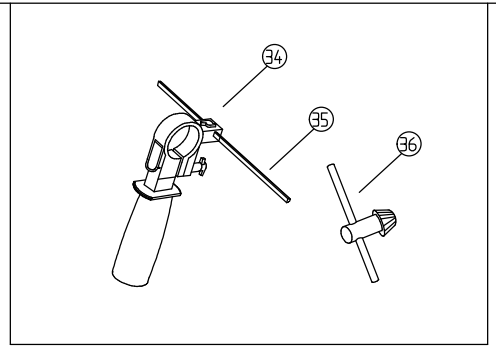

1. Screw
2. chuck
3. output spindle
4. ball
5. spring
6. Ogallay beaning
7. circlip
8. gear
9. middle frame
10. pad
11. button
12. ball bearing(608)
13. brush
14. carbon brush
15. brush holder cap
16. housing
17. Screw
18. inductor
19. ball
20. circlip
21. Ogallay bearing
22. rotor
23. ball bearing(626)
24. stator
25. trademark
26. housing
27. Linking piece
28. Screw
29. switch
30. capacitor
31. cord guard
32. cord
33. nameplates
34. handle
35. yardstick
36. Key