Product exploded view

ADEO Ref	815360
EAN Code	3276007417708

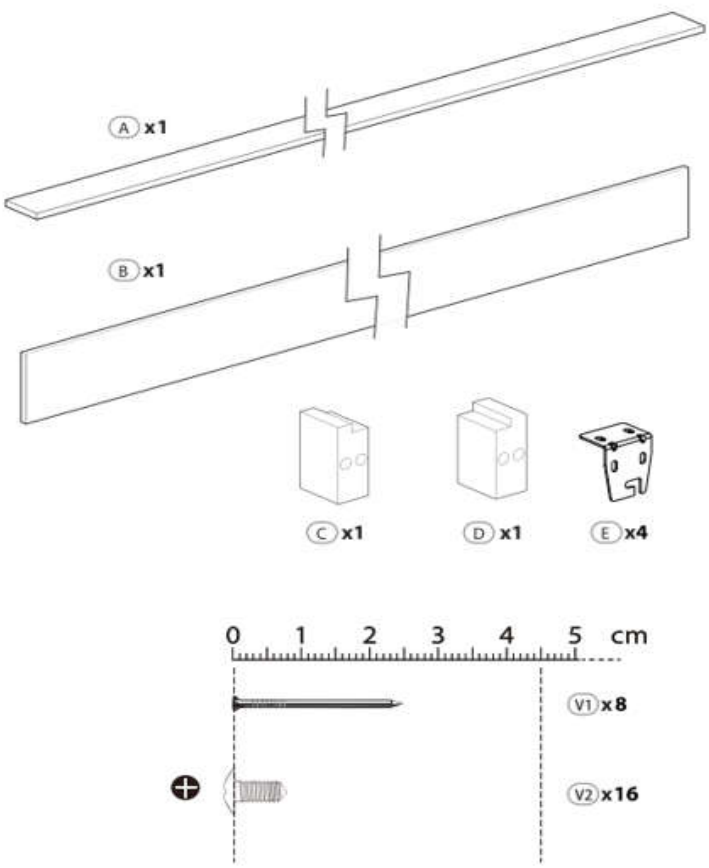

Parts No.	Name	Quantity	Material & Surface process
A	MDF TOP PANEL	1	MDF&natural
B	MDF COVER PANEL	1	MDF&natural
C	MDF SUPPORT	1	MDF&natural
D	MDF SUPPORT	1	MDF&natural
E	PANEL CONNECTOR	4	STEEL&galvanized
V1	DOWEL	8	STEEL&nickel-plated
V2	SCREW	16	STAINLESS STEEL