Simon Rack

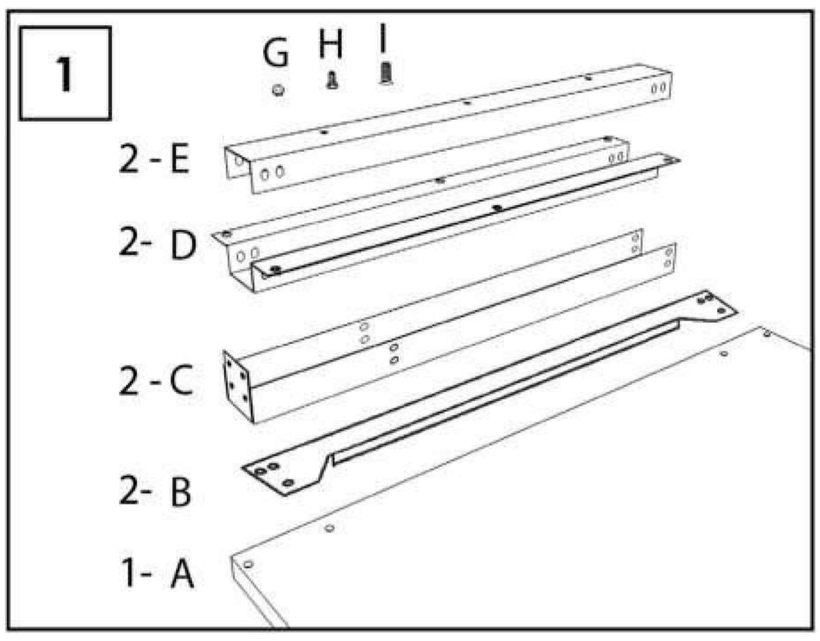

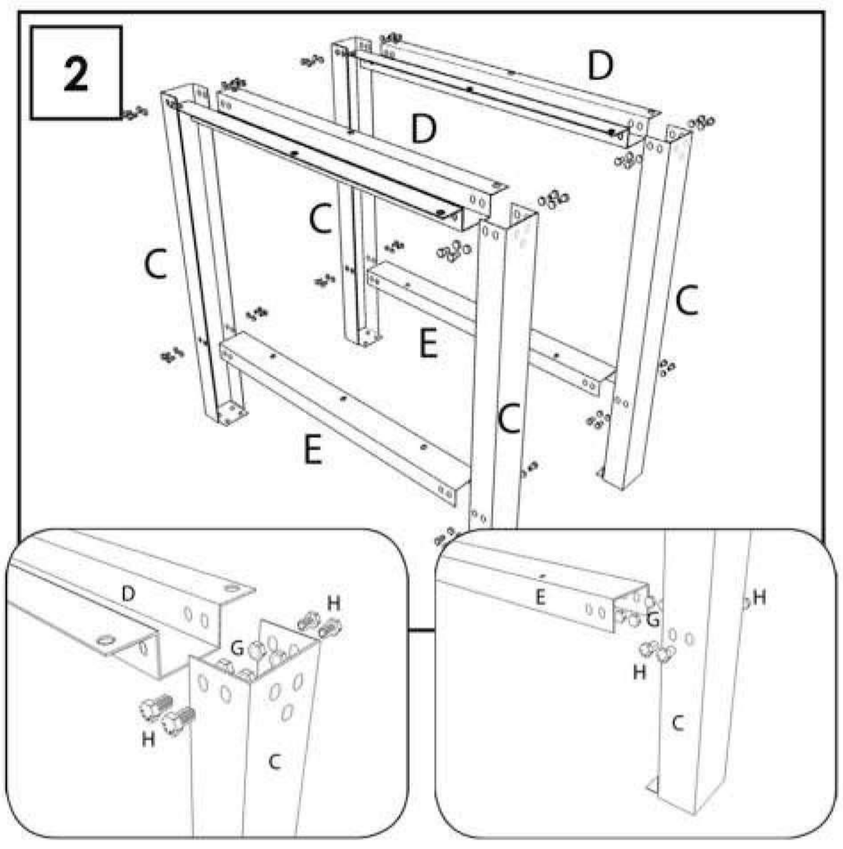

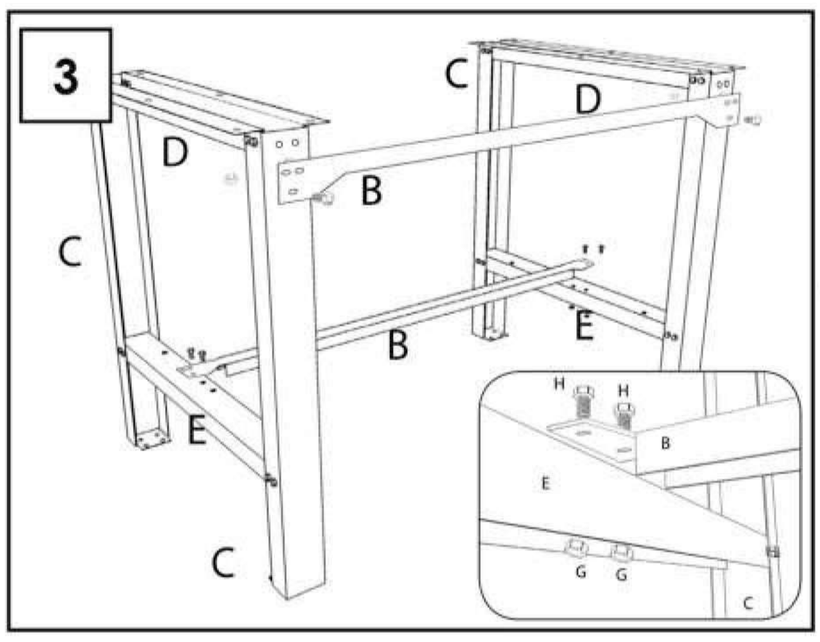

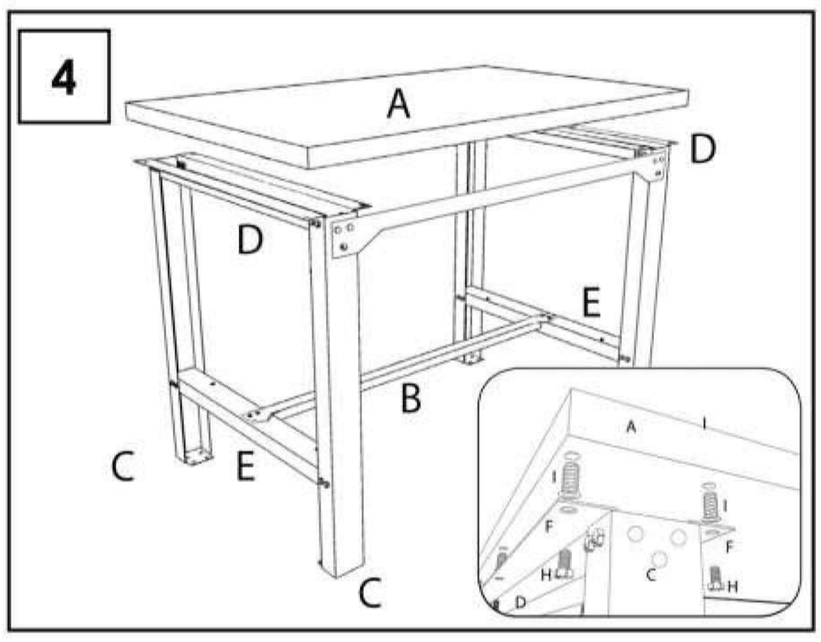

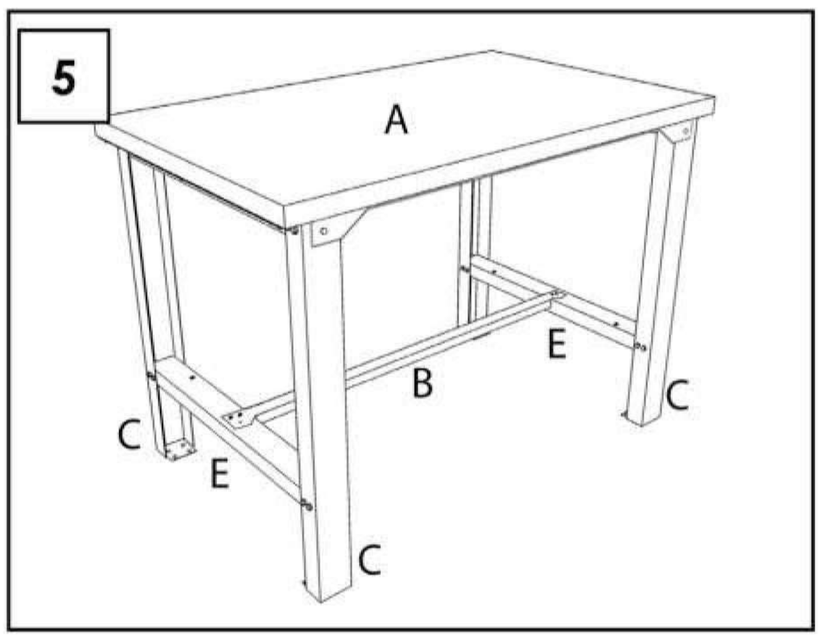

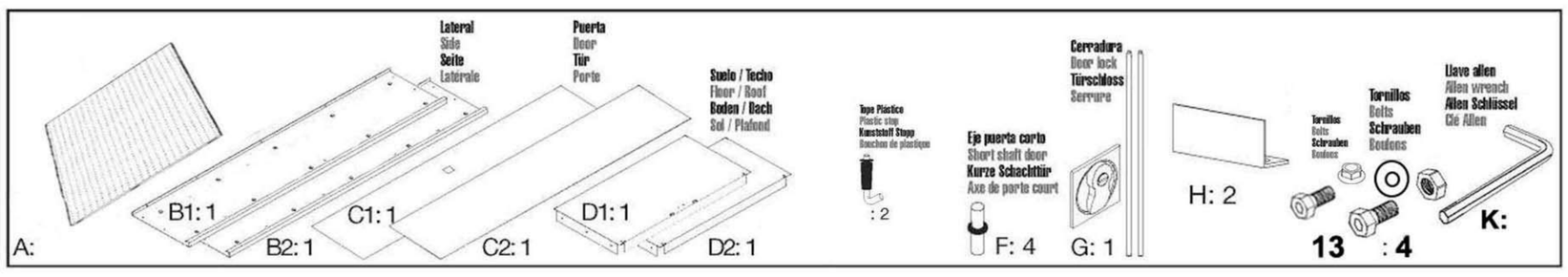

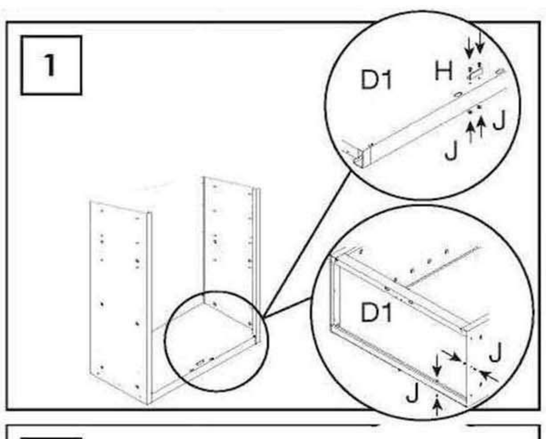

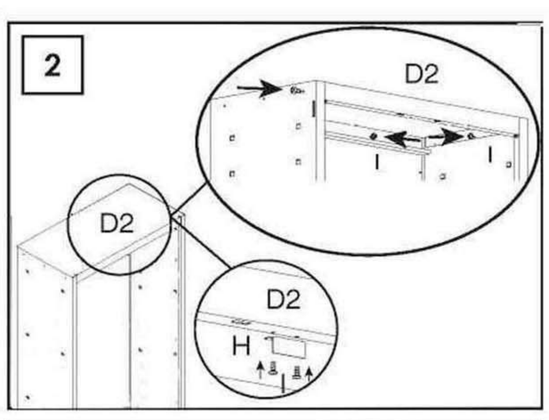

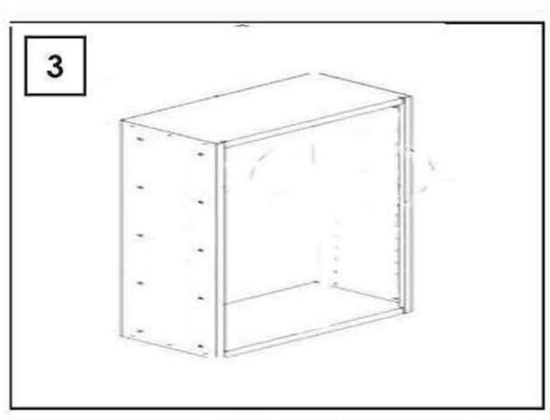

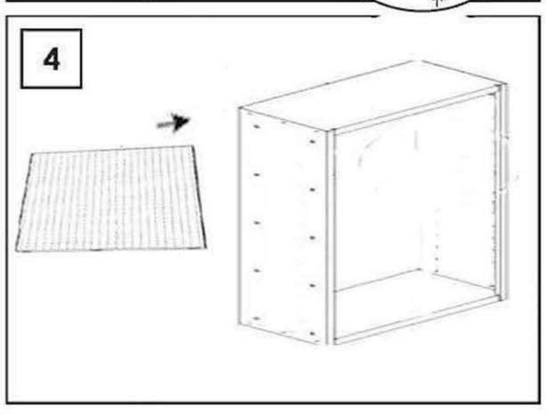

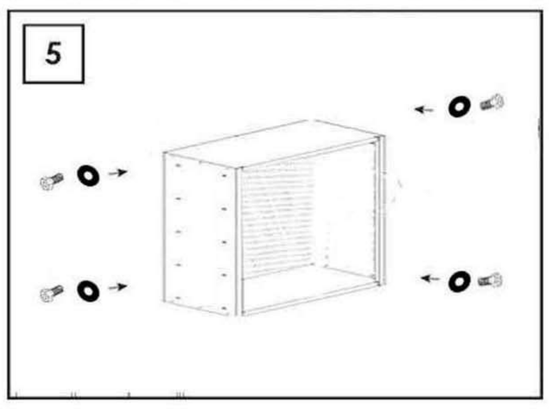

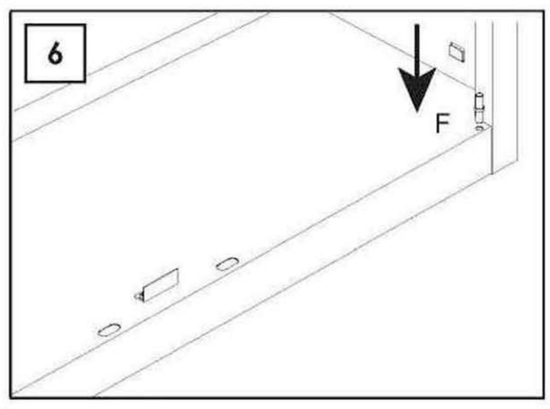

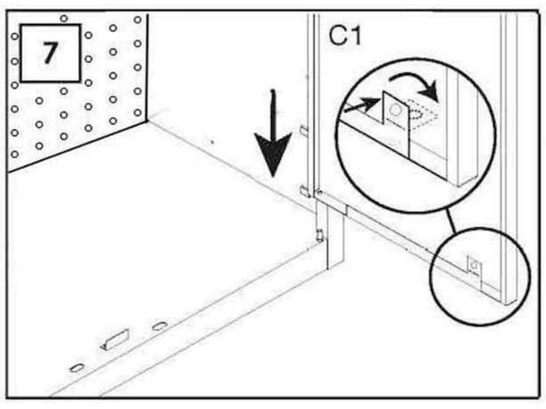

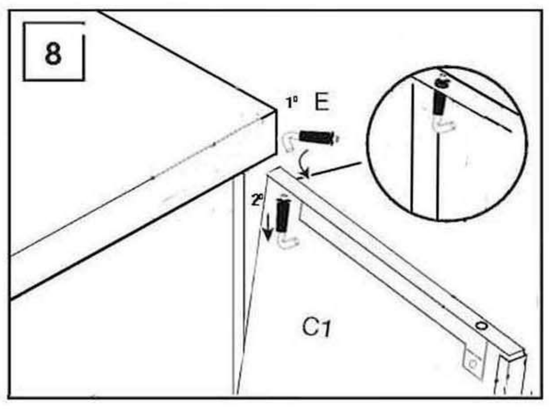

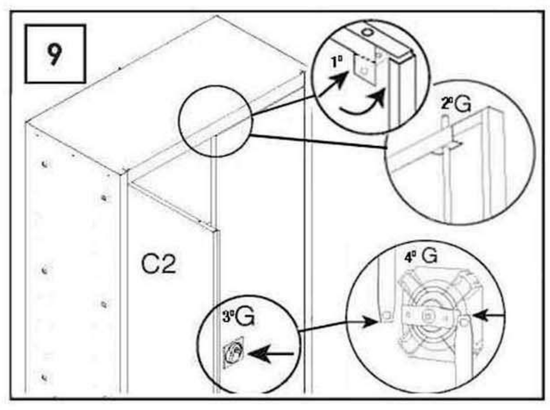

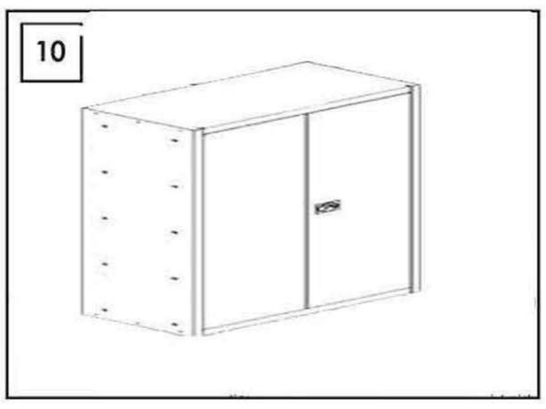

On-line instructions: **www.instructionsrack.com/bt6plywoodlocker**

www.simonrack.com • www.simonrack.com • www.simonrack.com •