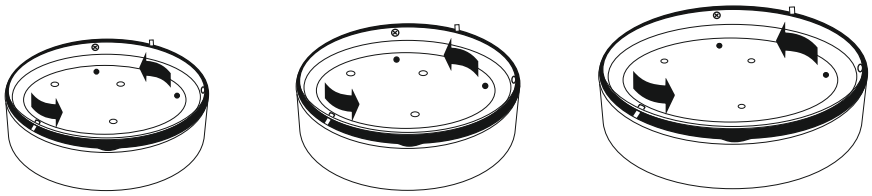

1.

LD-PD 6.1 LD-PD 6.2 LD-PD 6.3

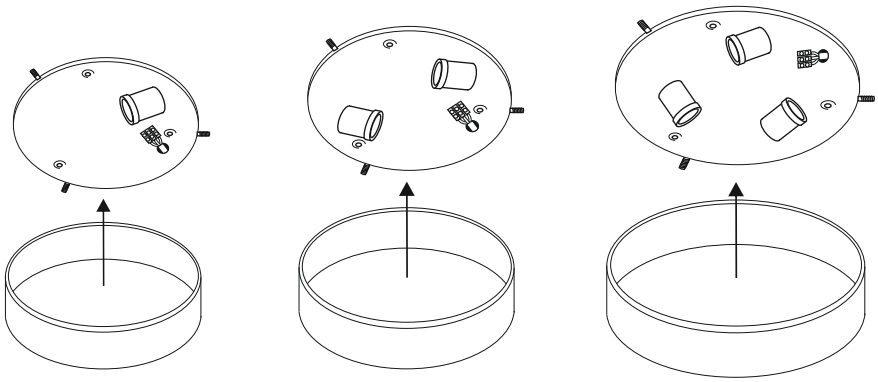

2.

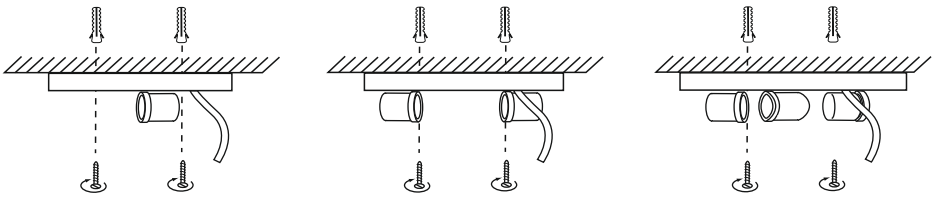

3.

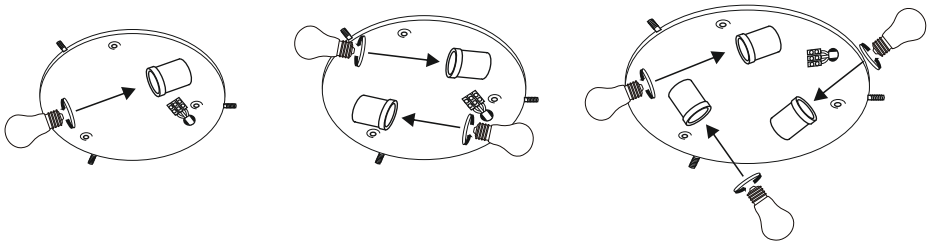

4.

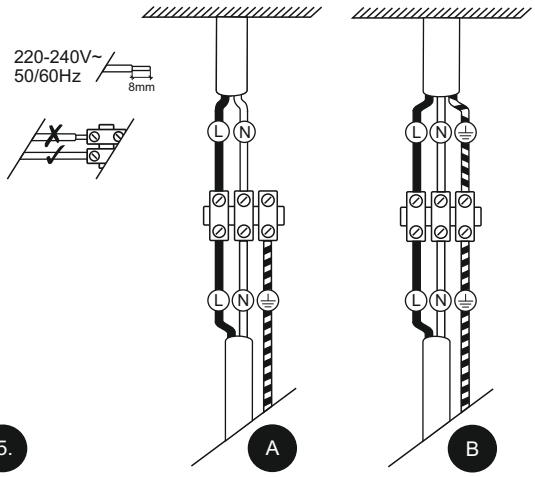

5.

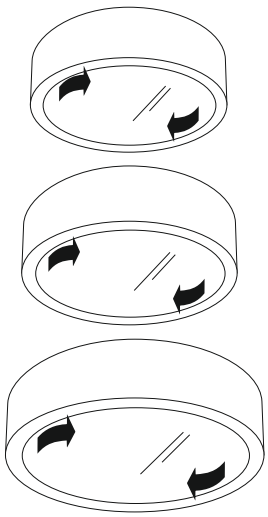

6.