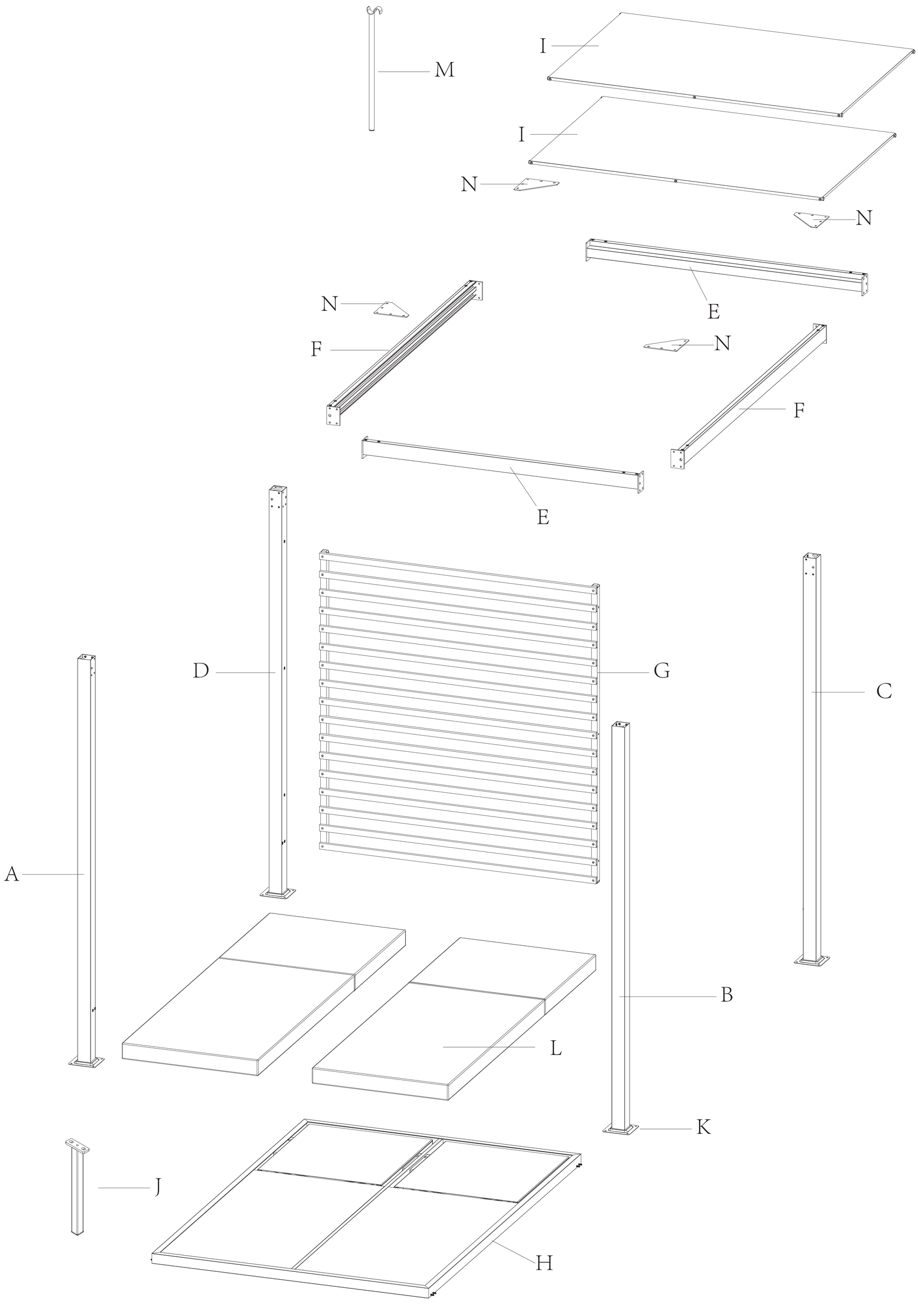

part	Designation	Material	Dimension(mm)	Quantity
A	stand pole	alum 6063	65*65*1.0	1
B	stand pole	alum 6063	65*65*1.0	1
C	stand pole	alum 6063	65*65*1.0	1
D	stand pole	alum 6063	65*65*1.0	1
E	crossbeam	alum 6063	70*65*1.0	2
F	crossbeam	alum 6063	70*35*1.0	2
G	screen	alum 6063	30*30*1.0, 30.2*15.2*1.1, ± 5%	1
H	bed	alum 6063+steel Q195 + texilene	50*30*1.2, 2*1 texilene	1
I	roof	alum 6063 + texilene	D16*1.2, 1*1 texilene	2
J	support leg	alum 6063	20*20*1.2	1
K	base	steel Q195	135*135	4
L	cushion	polyester+fiber+foam	2000*690*40	2
M	push bar	steel Q195	D16*1400	1
N	cornner	steel Q195	165*165	4