由 Autodesk 教育版产品制作

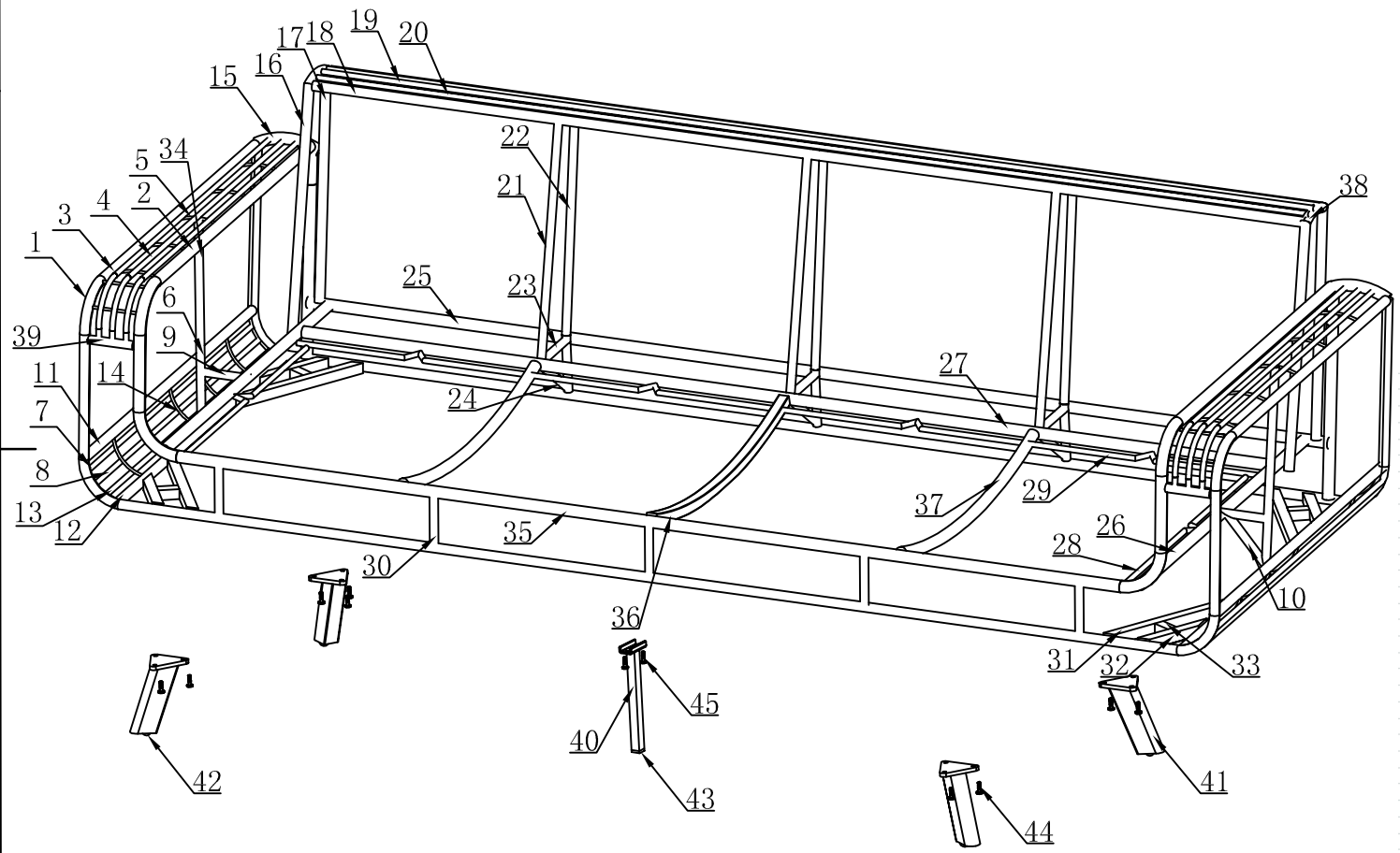

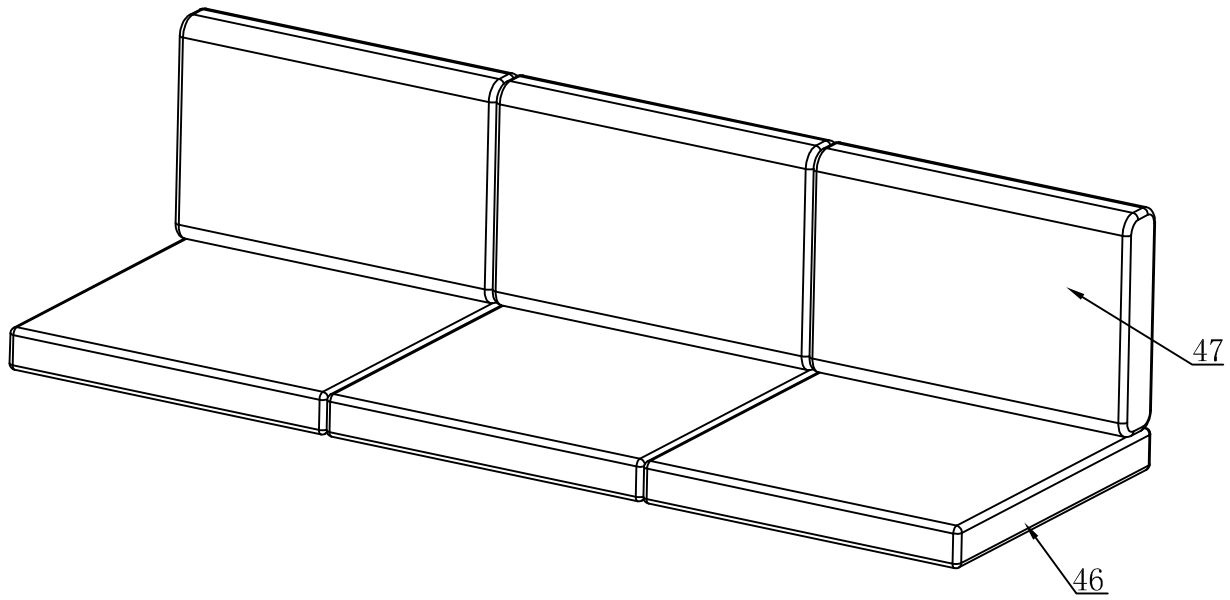

No	Mould Ref	part designation	qty	raw material	Spec		source of raw material	% of recycled material	surface treatment	part net weight	
1	YJLD-013	Handrail tube 1	1	aluminum	ø19*1.2*	4625	Tairhou		powder coating	0.86	0.84
2	YJLD-012	Handrail tube 2	1	aluminum	ø22*1.2*	3020	Tairhou		powder coating	0.91	0.89
3	YJLD-607	Handrail tube 3	4	aluminum	ø10*1.0*	905	Tairhou		powder coating	0.28	0.28
4	YJLD-607	Handrail tube 4	2	aluminum	ø10*1.0*	910	Tairhou		powder coating	0.14	0.14
5	YJLC-049	Handrail bend 2	10	aluminum	ø5*	95	Tairhou		powder coating	0.07	0.07
6	YJLD-028D	Handrail support pipe	2	aluminum	ø16*1.0*	400	Tairhou		powder coating	0.10	0.10
7	YJLD-607	Side tube A	2	aluminum	ø10*1.0*	815	Tairhou		powder coating	0.13	0.12
8	YJLD-607	Side tube B	2	aluminum	ø10*1.0*	815	Tairhou		powder coating	0.13	0.12
9	YJLD-028D	Side connection tube	2	aluminum	ø16*1.0*	75	Tairhou		powder coating	0.02	0.02
10	YJLD-028D	Side support tube	2	aluminum	ø16*1.0*	125	Tairhou		powder coating	0.03	0.03
11	YJLD-013	Armrest pipe	2	aluminum	ø19*1.2*	820	Tairhou		powder coating	0.31	0.30
12	YJLD-013	Bottom support pipe	2	aluminum	ø19*1.2*	815	Tairhou		powder coating	0.30	0.30
13	YJLD-607	Side side tube C	2	aluminum	ø10*1.0*	820	Tairhou		powder coating	0.13	0.13
14	YJLC-049	Bend pipe	10	aluminum	ø5*	90	Tairhou		powder coating	0.05	0.05
15	YJLD-013	Handrail connection pipe	2	aluminum	ø19*1.2*	165	Tairhou		powder coating	0.08	0.07
16	YJLD-013	Dorsal duct 1	2	aluminum	ø19*1.2*	480	Tairhou		powder coating	0.18	0.17
17	YJLD-013	Posterior tube 1	2	aluminum	ø19*1.2*	455	Tairhou		powder coating	0.17	0.16
18	YJLD-013	Dorsal transverse canal	2	aluminum	ø19*1.2*	1980	Tairhou		powder coating	0.74	0.72
19	YJLD-607	Back tube	3	aluminum	ø10*1.0*	1980	Tairhou		powder coating	0.47	0.45
20	YJLC-049	Back bend 2	7	aluminum	ø5*	65	Tairhou		powder coating	0.02	0.02
21	YJLD-028D	Back support tube 1	3	aluminum	ø16*1.0*	450	Tairhou		powder coating	0.18	0.17
22	YJLD-028D	Back support tube 2	3	aluminum	ø16*1.0*	550	Tairhou		powder coating	0.22	0.21
23	YJLD-028D	Connecting pipe	3	aluminum	ø16*1.0*	125	Tairhou		powder coating	0.05	0.05
24	YJLD-028D	Rear support tube	3	aluminum	ø16*1.0*	165	Tairhou		powder coating	0.06	0.06
25	YJLD-013	Rear transverse tube	1	aluminum	ø19*1.2*	2250	Tairhou		powder coating	0.42	0.41
26	YJLD-012	Seat tube	2	aluminum	ø22*1.2*	815	Tairhou		powder coating	0.36	0.35
27	YJLD-012	Back tube	1	aluminum	ø22*1.2*	1940	Tairhou		powder coating	0.42	0.41
28	YJLD-607	Seat pull rattan tube 1	2	aluminum	ø10*1.0*	645	Tairhou		powder coating	0.10	0.10
29	YJLD-607	Seat pull rattan tube 2	4	aluminum	ø10*1.0*	490	Tairhou		powder coating	0.15	0.15
30	YJLD-028D	Front support tube	5	aluminum	ø16*1.0*	90	Tairhou		powder coating	0.06	0.06
31	YJLD-679A	Bottom tube 1	4	aluminum	20*20*1.2*	275	Tairhou		powder coating	0.27	0.26
32	YJLD-679A	Bottom tube 2	4	aluminum	20*20*1.2*	145	Tairhou		powder coating	0.14	0.14
33	YJLD-679A	Bottom connection pipe	4	aluminum	20*20*1.2*	45	Tairhou		powder coating	0.04	0.04
34	YJLD-013	Handrail rear pipe	1	aluminum	ø19*1.2*	3020	Tairhou		powder coating	0.56	0.55
35	YJLT-035F	Iron-lined pipe	1	Iron galvanizing	ø19*0.8*	1895	Tairhou		powder coating	0.70	0.68
36	YJLD-679A	Center tube 1	1	aluminum	20*20*1.2*	665	Tairhou		powder coating	0.16	0.16
37	YJLD-012	Center tube 2	2	aluminum	ø22*1.2*	665	Tairhou		powder coating	0.29	0.28
38	YJLD-013	Back joint tube	2	aluminum	ø19*1.2*	160	Tairhou		powder coating	0.06	0.06
39	YJLD-028D	strut	2	aluminum	ø16*1.0*	90	Tairhou		powder coating	0.02	0.02
40	YJLD-679A	Middle foot tube	1	aluminum	20*20*1.2*	225	Tairhou		heat transfer	0.05	0.05
41	A-13325	Foot tube	4	aluminum	60*35*	170	Tairhou		heat transfer	0.97	0.94
42	JN135	Adjusting knob	4	pp			Tairhou	21.00	powder coating		
43	CP-542	Foot pad	1	pp			Tairhou	21.00	powder coating		
44	WJ-0024	Hexagon socket flat head screw:	12	304 stainless steel	M6*25		Tairhou				
45	WJ-0023	Hexagon socket flat head screw:	2	304 stainless steel	M6*20		Tairhou				
46		seat and back fabric	3	arcylic			Tairhou				
47		filling	3	PU@polyester			Tairhou				

GENERAL TOLERANCES:
LINEAR:
ANGULAR:

Rev	NAME	DATE
01		
02		
03		
04		
05		
06		

ADEO -135, rue Sadi Carnot
CS 00001 - 59790 RONCHIN
FRANCE

MATERIAU/FINISHING:

TITRE:
SOFA 3P NATERIAL NEREA
WICKER ALU WOOD EFFECT

No. DE PLAN 3276007601459

A3

REVISION

ECHELLE: 1:1 (Scale can be adapted) Dimensions in mm FEUILLE 1 SUR 1

由 Autodesk 教育版产品制作