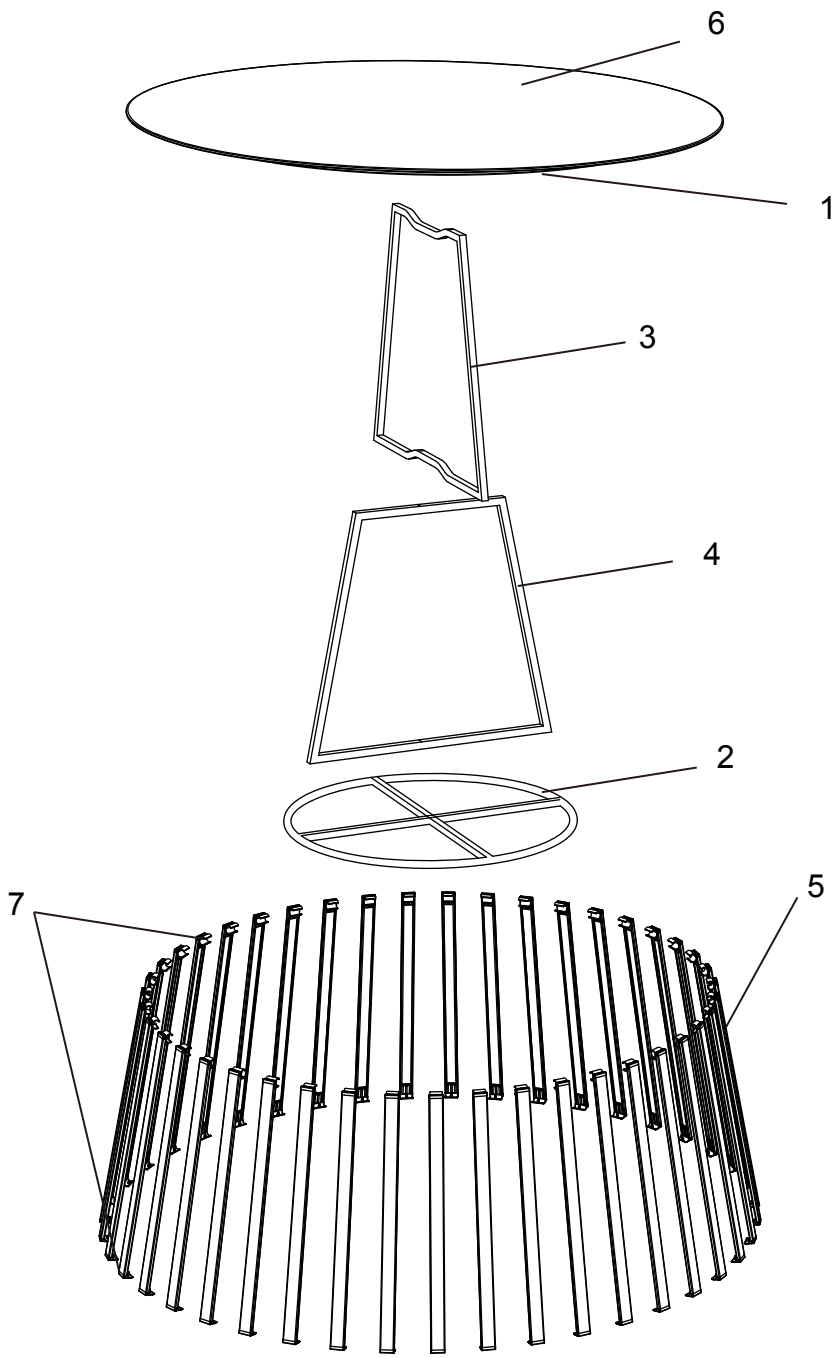

No.	part designation	raw material	source of raw material	surface treatment
1	table top frame	aluminum	China	powder coating
2	bottom frame	aluminum	China	powder coating
3	leg frame1	aluminum	China	powder coating
4	leg frame2	aluminum	China	powder coating
5	decoration tubes	aluminum	China	heat transfer
6	table top	glass	China	glazed glass
7	plastic parts	PP	China	