2024R07P04-0066

NEO LINE LED LIGHTING MIRROR SENSEA ROUND D120CM

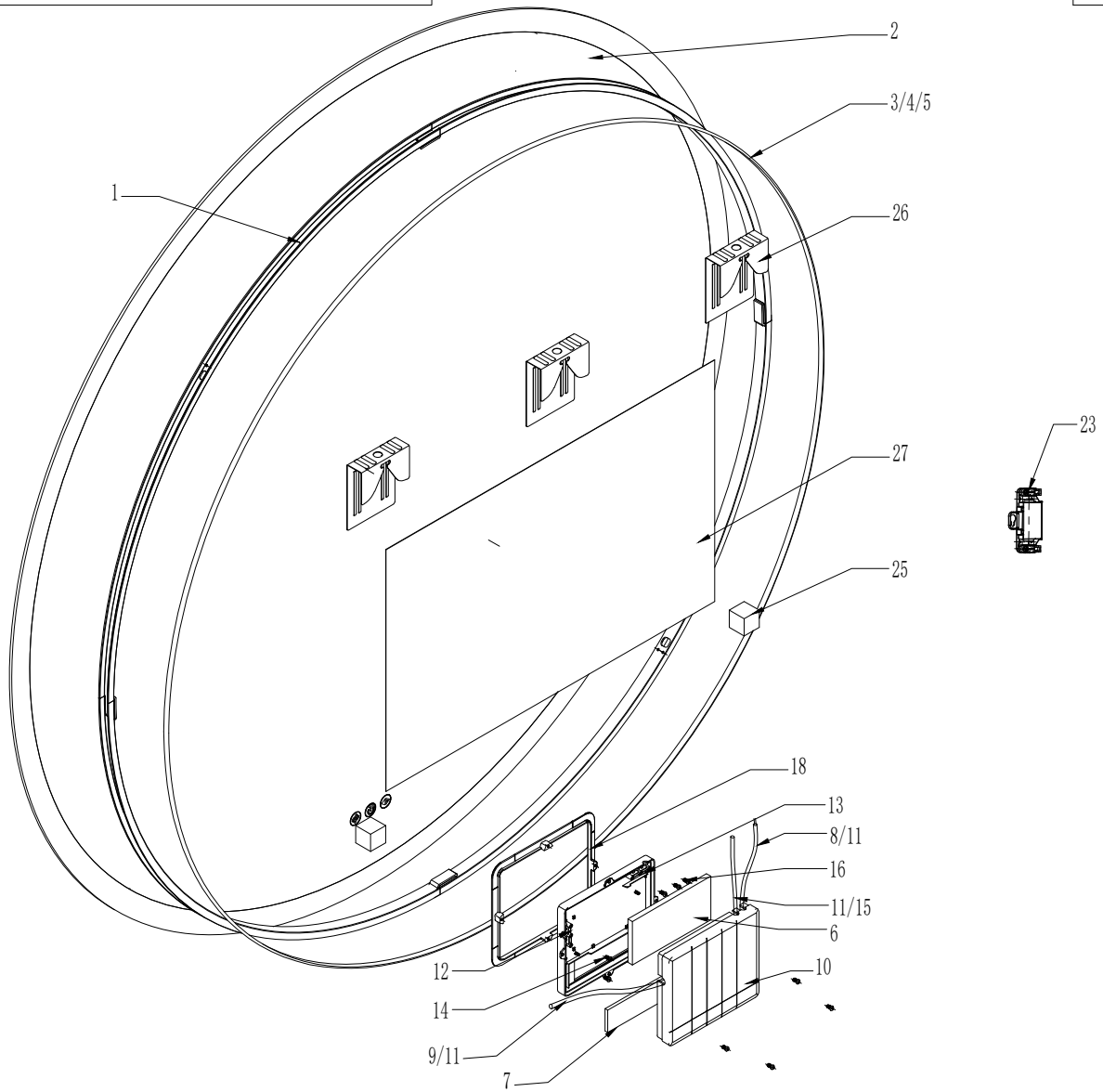

Item	Description	Material/Size	Unit	Conso
27	Anti-fog film 350*550	220-240Vac/50HZ/2*0.75mm2*400mm/ 350*550mm/4.5MM/IP44/CE（350W/㎡）	Pcs	1
26	Hanging bracket 25mm	98*80*25mm	Pcs	3
25	EVA foam cotton pad	25*25*25mm	Pcs	2
23	Terminal box	76*41*15mm，IP44 VK-JB+T085M03S(T)	Pcs	1
18	Driver box support	148.2*171.1*10.2mm	Pcs	1
16	M3 tapping screws	M3*16	Pcs	3
15	VDE wire(Waterproof female end)	2*0.75mm2*200mm/white/IP44	Pcs	1
14	M3 tapping screws	M3*10	Pcs	2
13	tension disc	22.5*7.8*3.5mm， PP	Pcs	1
12	Three-hole press buckle	35*7*5mm PP	Pcs	1
11	waterproof plug	φ10*11mm	Pcs	3
10	Driver box	162.7*139.8*24.5mm，UL94-V0	Pcs	1
9	Wire(Waterproof male end)	UL2468/3P/22AWG/length 150mm/A2009HF-3P	Pcs	2
8	VDE wire	2×0.75mm2×500mm，white	Pcs	1
7	Touch panel BCD	BCD/115*34mm*1.2mm	Pcs	1
6	Driver 42W(220V)	AC-DC driver/200-265VAC/12Vdc/42W>85%/CE/with 5-pin socket/dimming,anti-fog film	Pcs	1
5	φ6 heat shrink sleeve	φ6*200m RSFR-H 125℃ VW-1	Pcs	0.001
4	Wire（Waterproof female end）	UL2468/3p/22AWG/length 300mm/A2009HF-3P	Pcs	2
3	LED 3530mm	SMD 2835 424/bicolor/DC12V/≥175LM/W/class D/RA>80/8mm/3530mm/3000K/6500k	Pcs	1
2	Mirror	Φ1200*4mm	Pcs	1
1	Radiator case frame	Φ1110*16mm	Pcs	1

Version NO.:V1.2

Date:11/05/2023