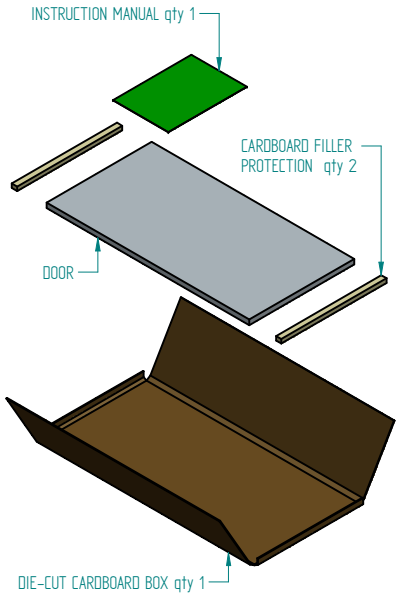

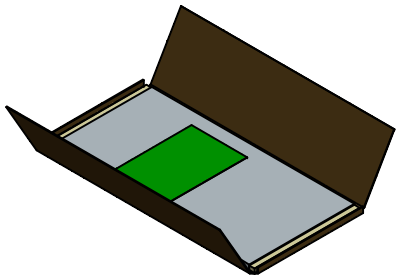

only for
F37/77 - FALH30/77 - FALH30/103

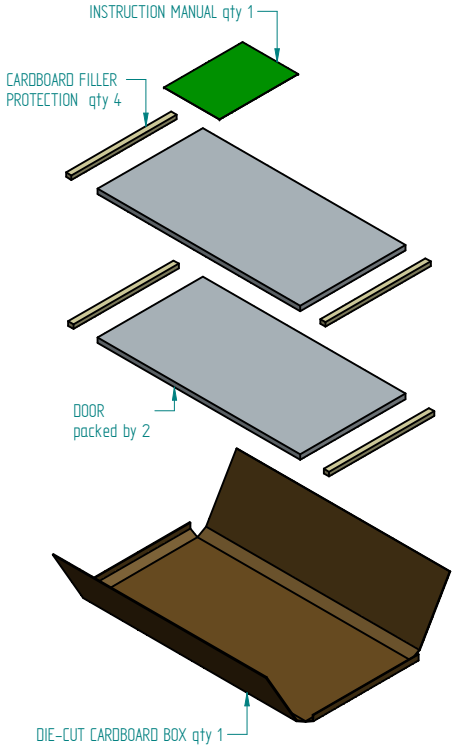

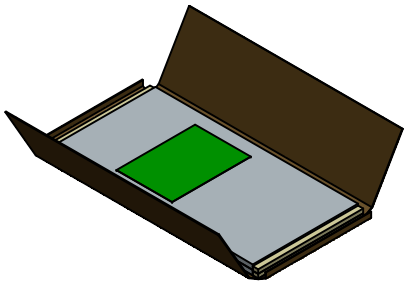

only for
FDB60/17

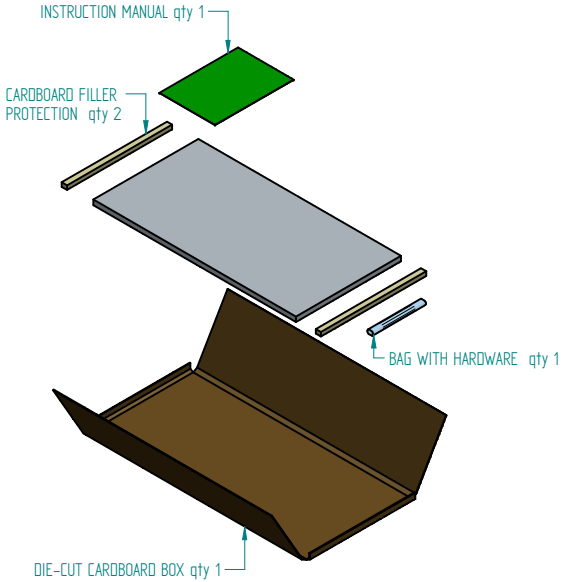

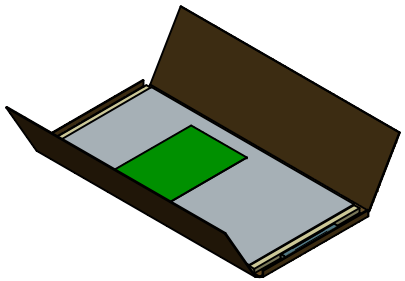

only for
FDSH45/77 - FDSH60/77

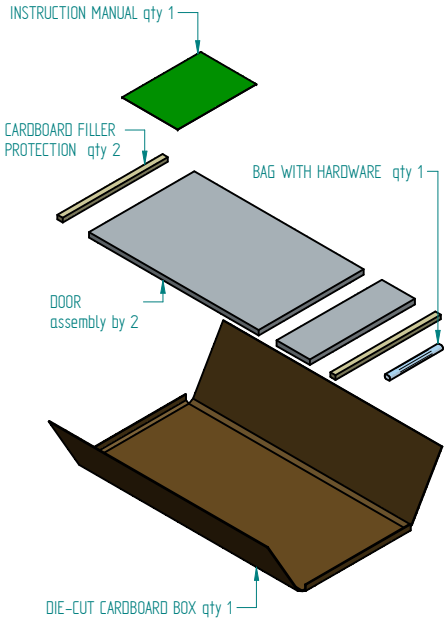

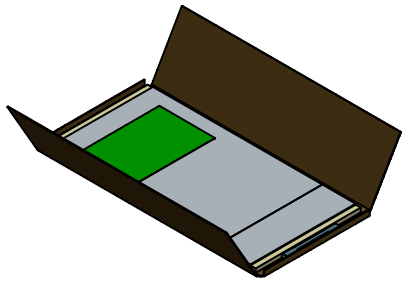

Tolerance	Scale 1:10	Sheet 1/1	Version		
Designed by FAB group PEOPLE FASHION INDUSTRY ©2020 Gallo di Petrano (PU) ITALY Tel. +39072235521 www.fabgroup.com fab@fabgroup.com	Product			Checked by	Rev
				Checked by	Rev
				Approved by Marchesi	Date 28/11/23
	Product name			Document number PPP ADEO DOORS	