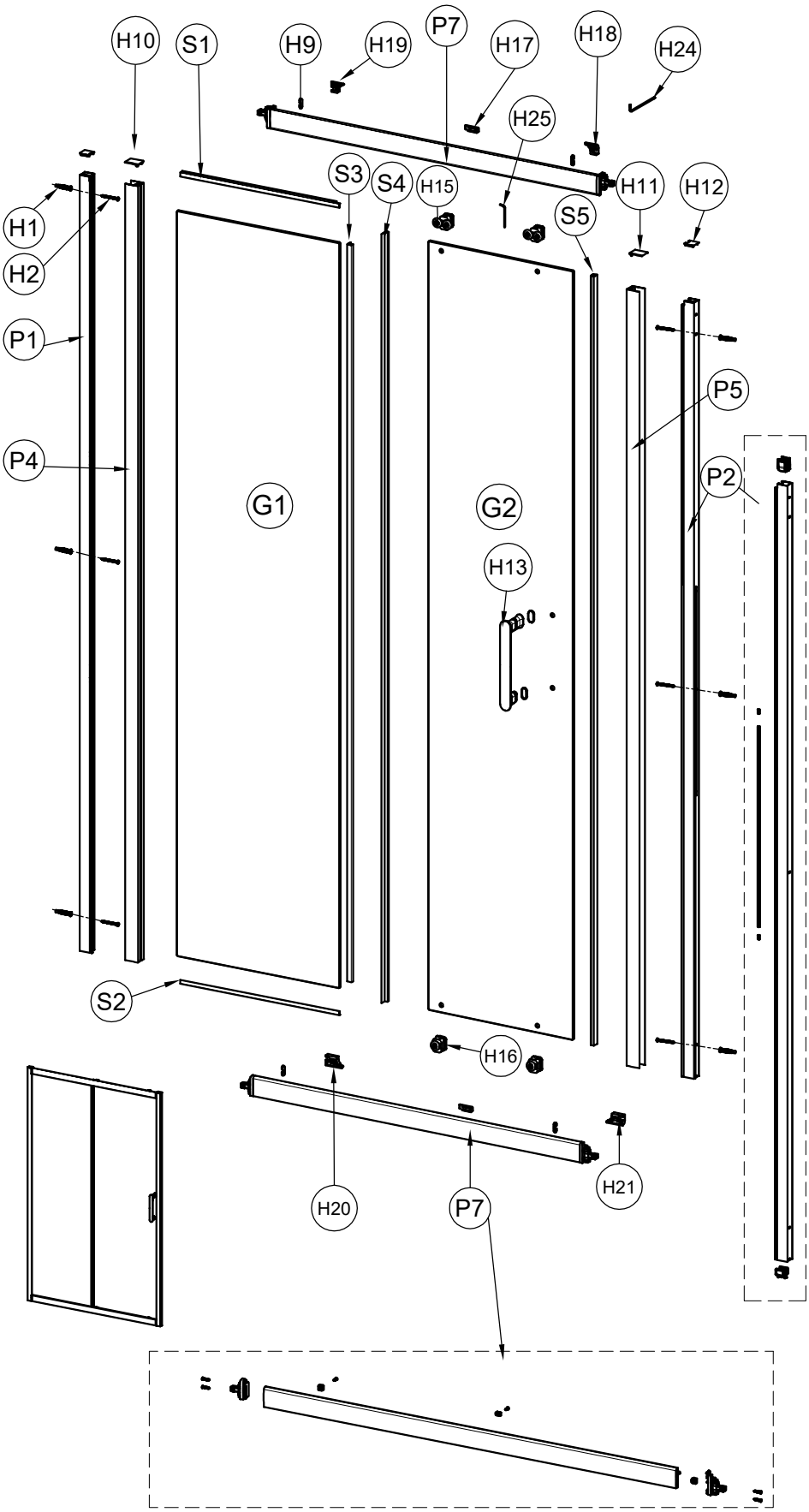

Product Code	Manual N0.	Code.	Finish	Remark
EA5014005001	G1	2906050192	transparent	
EA5014005002		2906050204	printing	
EA5014005001	G2	2906050191	transparent	
EA5014005002		2906050203	printing	
▼ CTN 1 / 2		▲ CTN 2 / 2		
EA5014005010	P1	3209651899D1	chrome	
		0403511YE		
		0403512YE		
		2001026		3.5X13
		0403514GR		
		0204140485		
	P2	3209651899D2	chrome	
		0403511YE		
		0403512YE		
		2001026		3.5X13
		0403514GR		
		0204140485		
	P4	3209311900D1	chrome	
		0203861828		
	P5	3209661900D1	chrome	
		0403513GR		
		0101601864GN		
	P7	3209261295D1	chrome	
		0403434	chrome	
		0403435	chrome	
		2201118GR		
		0701061GR		
		2001073		ST3.9X13
		2001039		ST3.5X19
	H1	2005004		
	H2	2001111		
	H9	2301035	chrome	
	H10	0403436		
	H11	0403437		
	H12	0403438		
	H13	1012018	chrome	
	H15	2822032	chrome	
	H16	2821056	chrome	
	H17	2201117	chrome	
	H18	0701054	chrome	
	H19	0701053	chrome	
	H20	0701056	chrome	
	H21	0701055	chrome	
	H24	3601035		T20
	H25	3601002		3mm
	S1	0203870636D1		
	S2	0203870636D2		
	S3	0201161804		
	S4	0203471882		
	S5	0101611882GS		

CTN 1 / 2

Product Code	Description	FINISH
EA5014005010	Sliding profile 140x190cm	chrome

CTN 2/ 2-GLASS

Product Code	Description	FINISH
EA5014005001	Sliding glass 140x190cm	transparent
EA5014005002	Sliding glass 140x190cm	printing

adeo
This drawing is the exclusive property of ADEO.
Any reproduction in part or whole without the written permission of ADEO is prohibited.