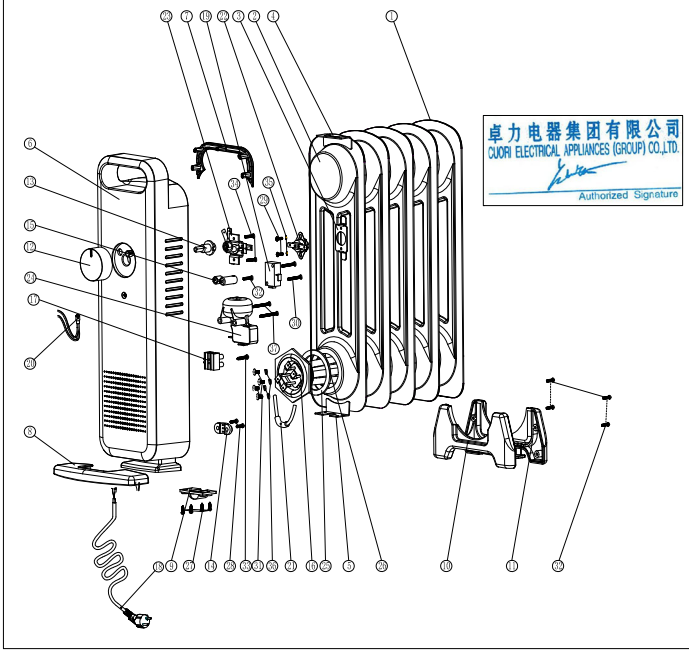

卓力电器集团有限公司
CUORI ELECTRICAL APPLIANCES (GROUP) CO.,LTD.
Authorized Signature

37	Screw	M3X5×28	PCS	2	☑
36	Spring washer	φ4	PCS	2	☑
35	Spring washer	φ3	PCS	2	☑
34	Screw	M3X5×10	PCS	1	☑
33	Screw	M3X6×8	PCS	1	☑
32	Screw	M3X5×8	PCS	3	☑
31	Screw	M4×6	PCS	2	☑
30	Screw	M3X3×6	PCS	2	☑
29	Screw	M3X5×5	PCS	2	☑
28	Screw	M3X4×22	PCS	2	☑
27	Screw	M3X5×30	PCS	4	☑
26	nut	M3 (L=2.5 M2)	PCS	1	☑
25	Graphite pad	Graphite	PCS	1	☑
24	Tip-over Switch	250V 16A	PCS	1	☑
23	Adjustable thermostat	KS-D08 250V~ 16A	PCS	1	☑
22	Non-adjustable thermostat	KSD301 250V~ 30A	PCS	1	☑
21	Thermal link	250V~ 15A	PCS	1	☑
20	The seat bomb assembly	φ5×12 120N	PCS	1	☑
19	Push-button switches	KDC-4 250V~ 15A T105	PCS	1	☑
18	Power plug type E / Power cord	VDE 250V~ 10A H05RR-F 3G0.75mm² cable power cord L=2M H2B	PCS	1	☑
17	Terminal seizure	F60 400V 20A T110	PCS	1	☑
16	Heating tube international	230V 500W	PCS	1	☑
15	Indicator shade	PC	PCS	1	☑
14	Pressing line plate	PP	PCS	1	☑
13	Leads Connecting parts	ABS	PCS	1	☑
12	leads	ABS	PCS	1	☑
11	Rear leg cover	ABS	PCS	1	☑
10	Rear leg	ABS	PCS	1	☑
9	Screwing press plate	ABS	PCS	1	☑
8	The front board	ABS	PCS	1	☑
7	Handle cover	ABS	PCS	1	☑
6	Control box	ABS	PCS	1	☑
5	Control box lower bracket	SPCC t=1.2mm	PCS	1	☑
4	Control box upper bracket	SPCC t=1.2mm	PCS	1	☑
3	bracket	SPCC t=1.0mm	PCS	1	☑
2	Flanges	SPCC t=1.0mm	PCS	1	☑
1	Oil tube divisionlon body	HPCS (R2.5mm,MS	PCS	1	☑
Serial number	Designation	Specification	Unit	Quantity	Confirmation ☑=Yes ☐=No

Drawing	Liu Long	Date	2024.04.09	version	V1
Checking	Hu Zhebang			011 mini 500W Circuit diagram&plastic view	CUORI
Audit	Li Long	Approve	Liu Kunqhui		1HD803-4530
Processing	Hang Bolin				

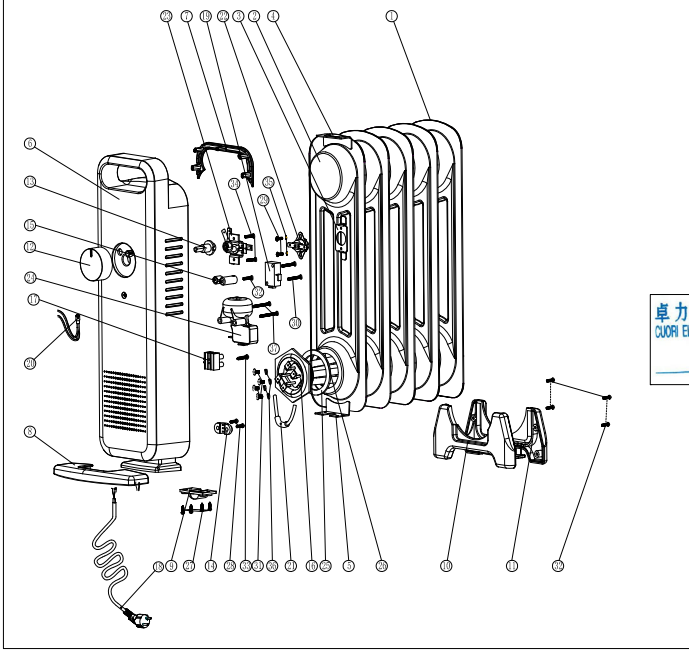

Spare parts

S/N	Designation	Matrix Code Technical Code Item code	Serial number	Designation	Specification	Quantity	Unit	22230407202878 HD803-4530(11)
1	Foot kit 011 mini 500W	22230406202878 HD803-4530(11)	36	Screw	M3X5×8	4	PCS	☑
			11	Rear leg cover	ABS	1	PCS	
			10	Rear leg	ABS	1	PCS	
			8	The front board	ABS	1	PCS	

Products compatibility
Matrix Code
Technical code

卓力电器集团有限公司
CUORI ELECTRICAL APPLIANCES (GROUP) CO.,LTD.
Authorized Signature

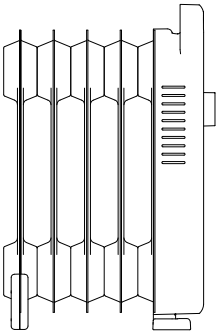

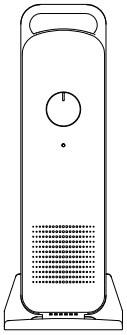

Matrix ID	Designation Short	Matrix Code	Technical Code(Item code)
2823080890-0180	011 MINI - HOME OIL HEATER 500W WHITE CERAMIC	22230407202878	1HD803-4530(11)

circuit diagram

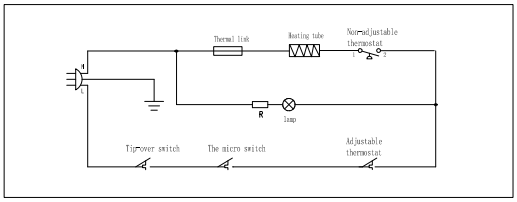

卓力电器集团有限公司
CUORI ELECTRICAL APPLIANCES (GROUP) CO.,LTD.
Authorized Signature