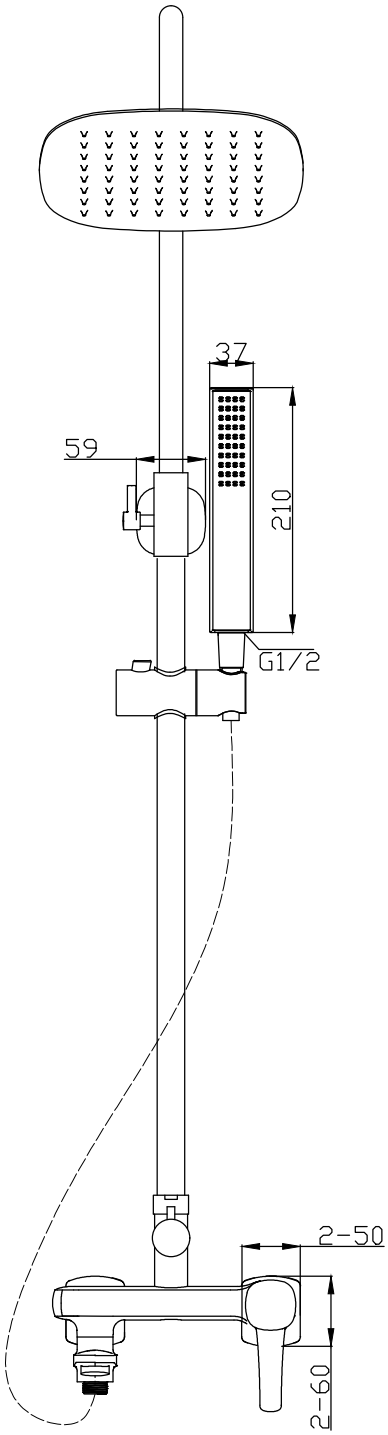
37
59
210
G1/2
2-50
2-60

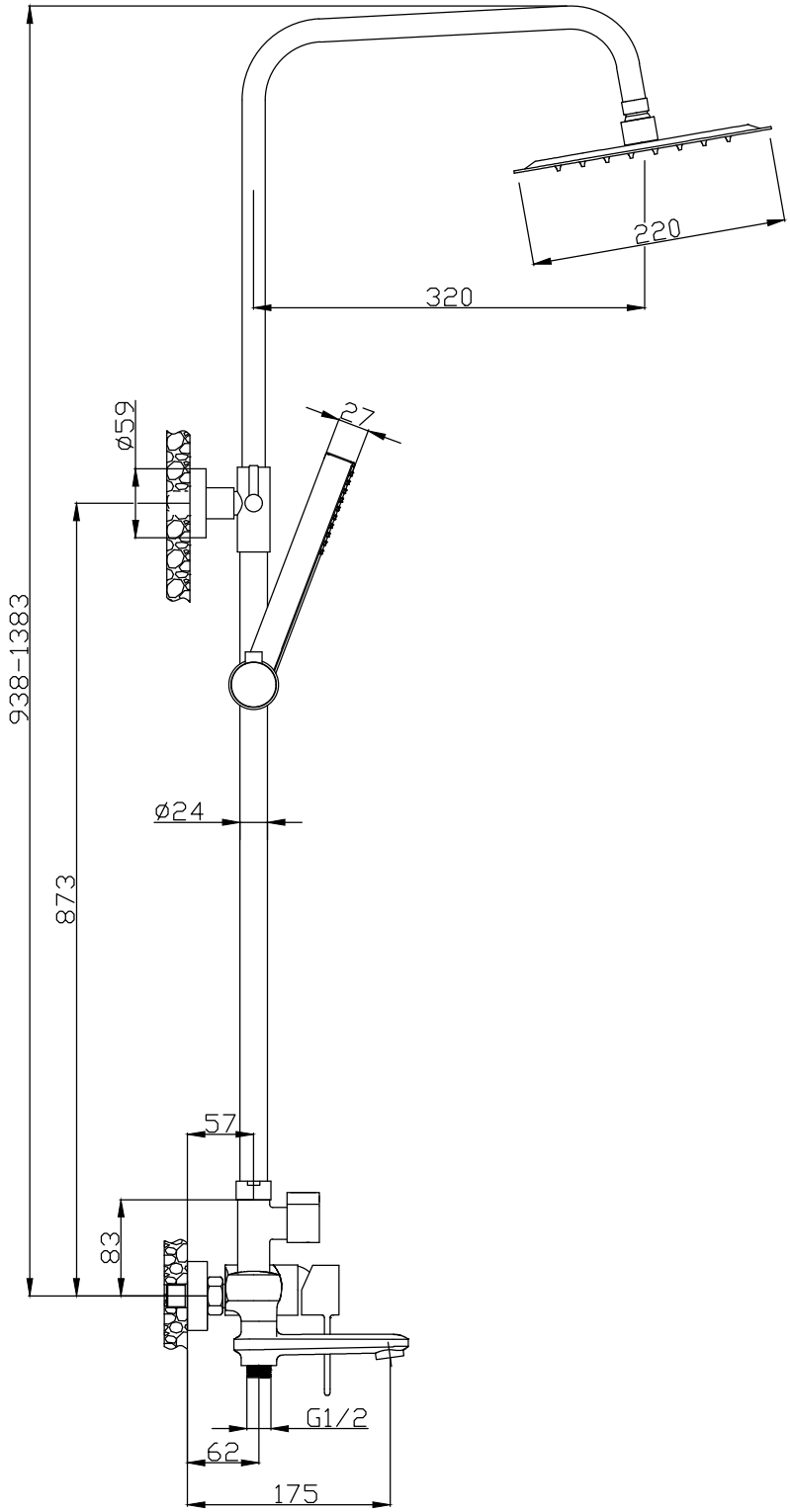
220
320
ø59
27
938-1383
ø24
873
57
83
G1/2
62
175

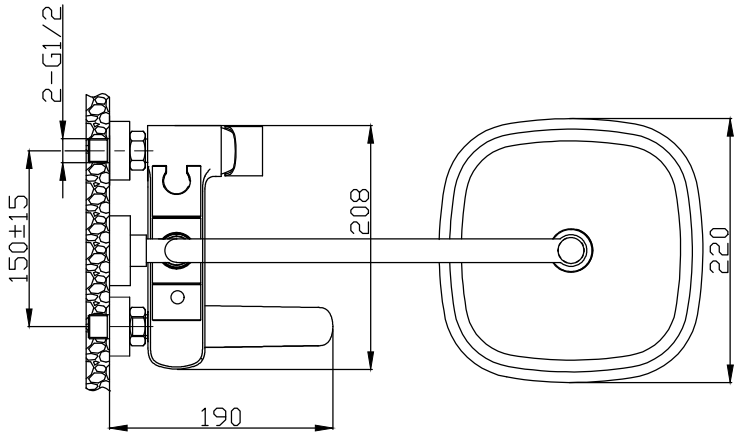
2-G1/2
150±15
208
220
190