TWO PC TOILET
Installation Manual

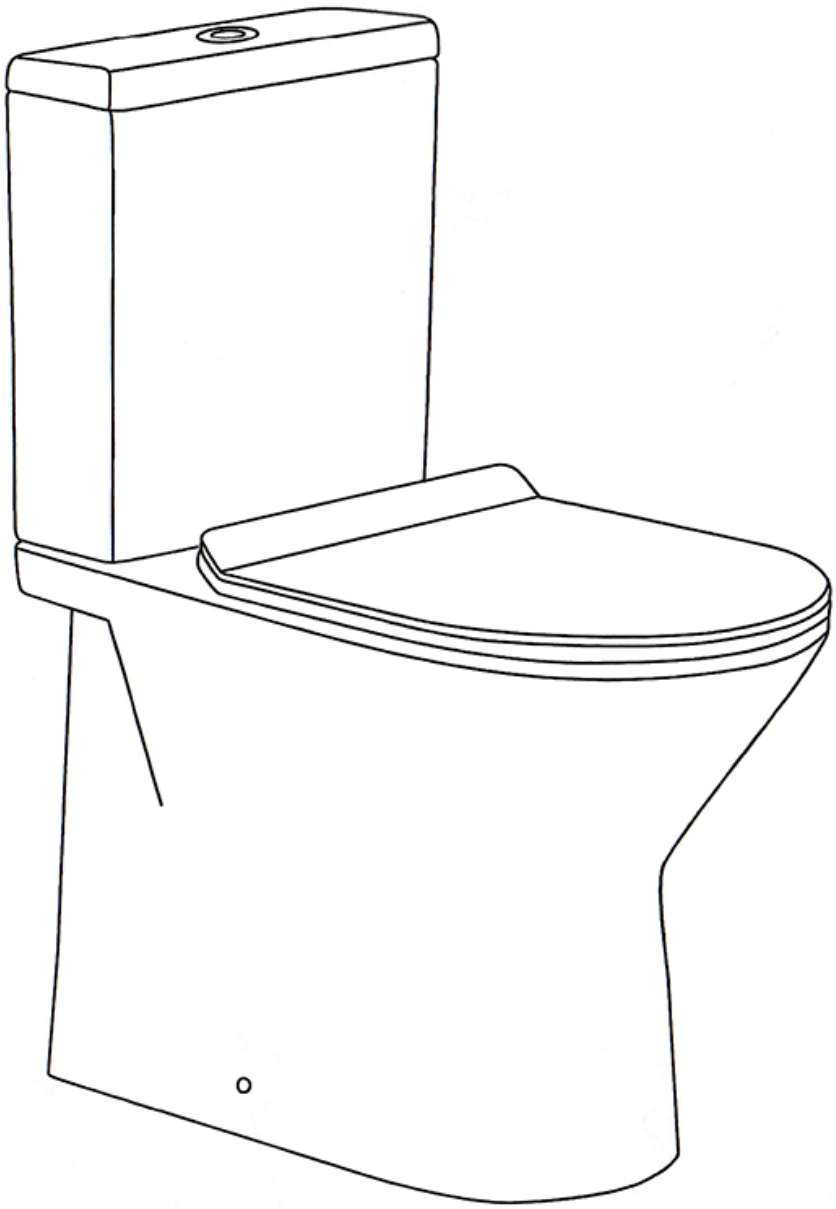

Parts List

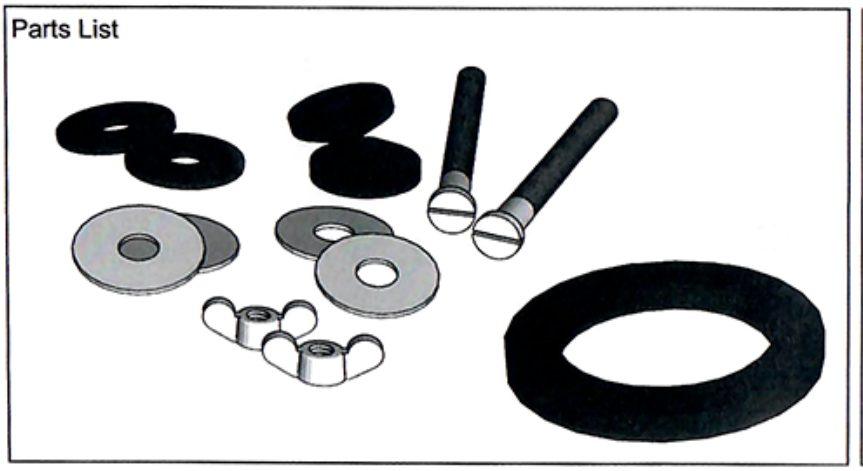

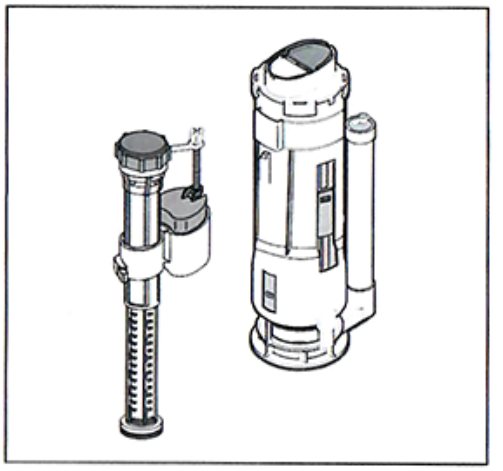

2

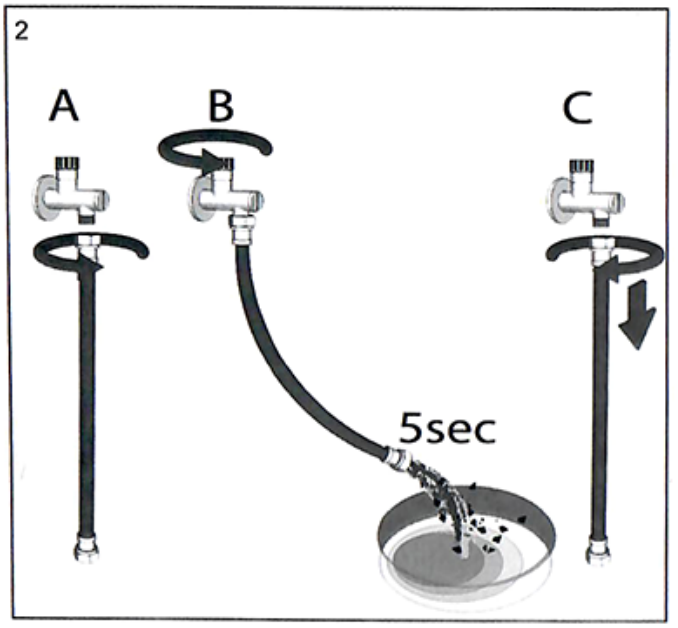

3

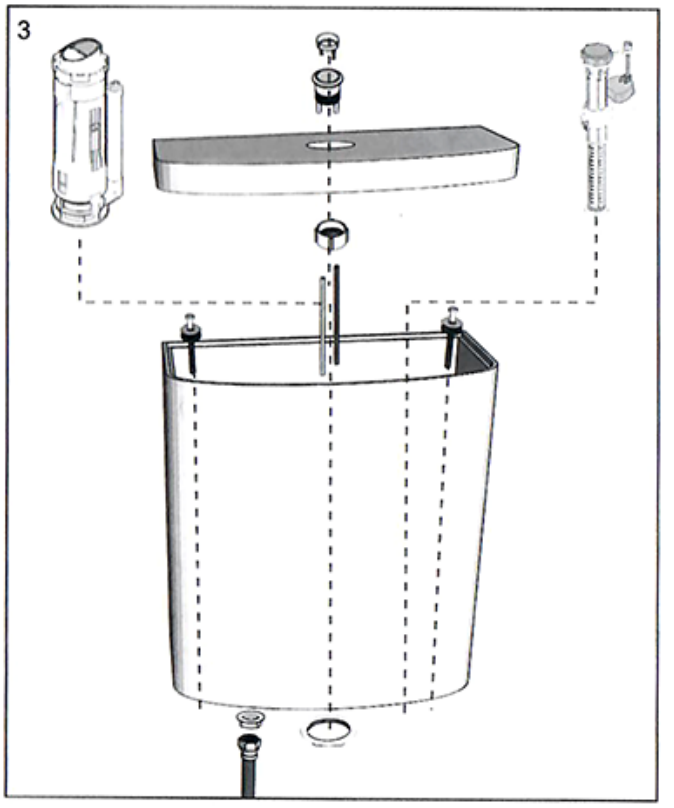

4

5

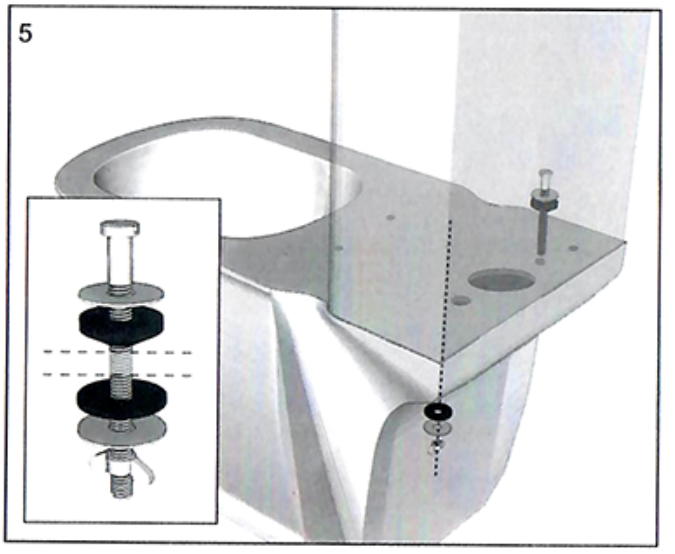

Parts List

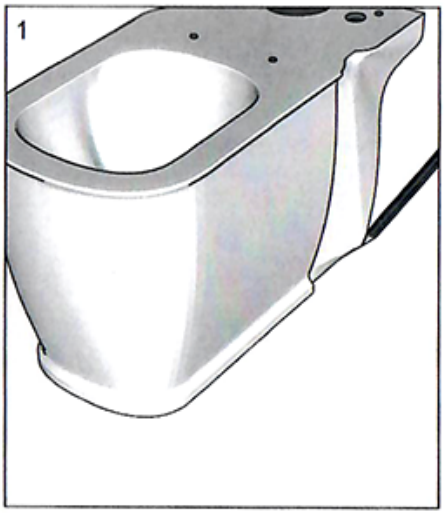

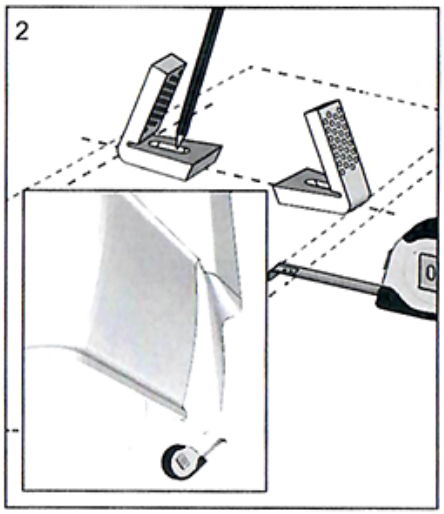

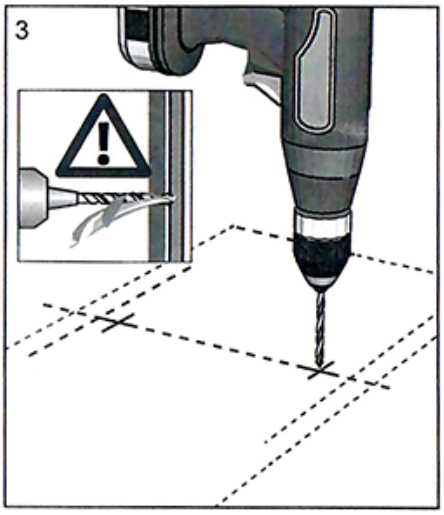

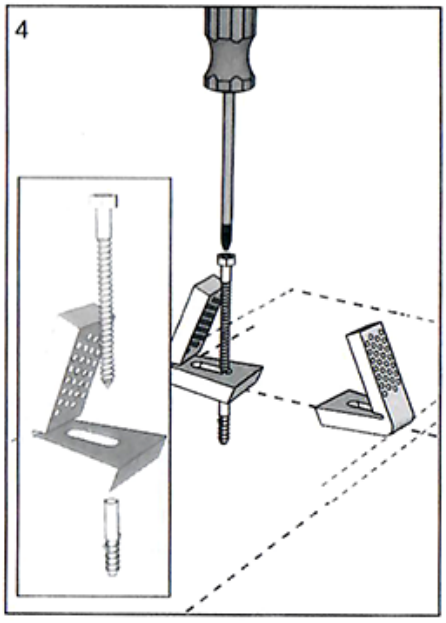

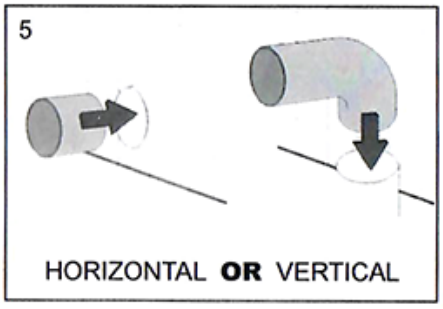

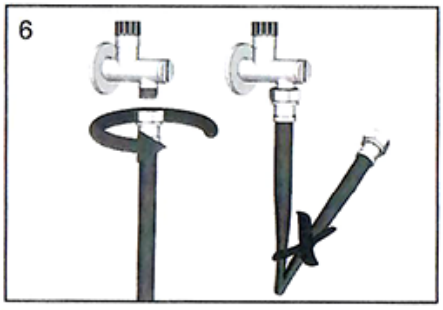

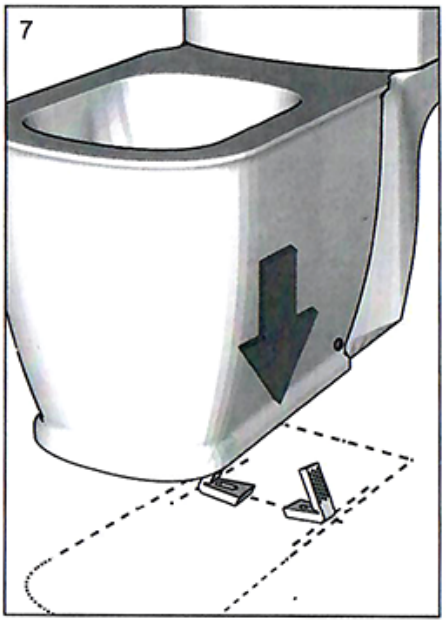

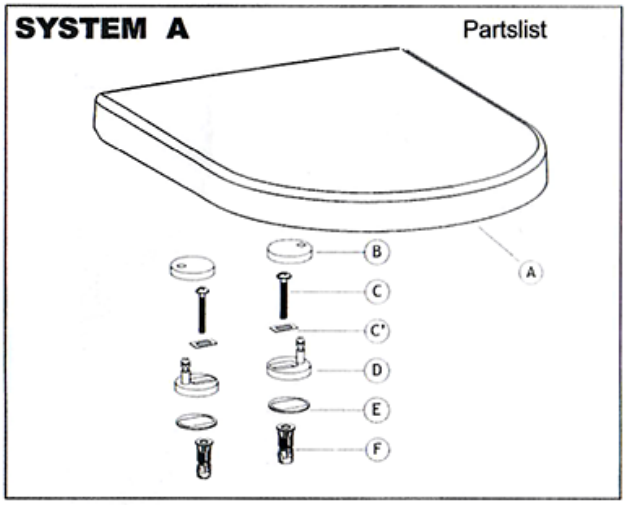
SYSTEM A
Partslist
A
B
C
C'
D
E
F

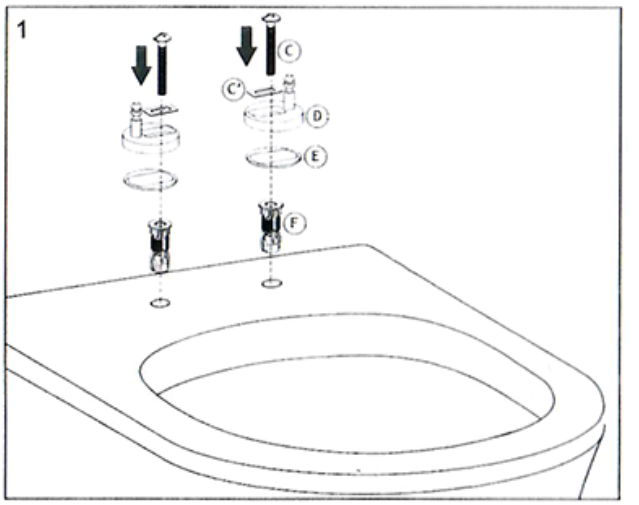
1
C
C'
D
E
F

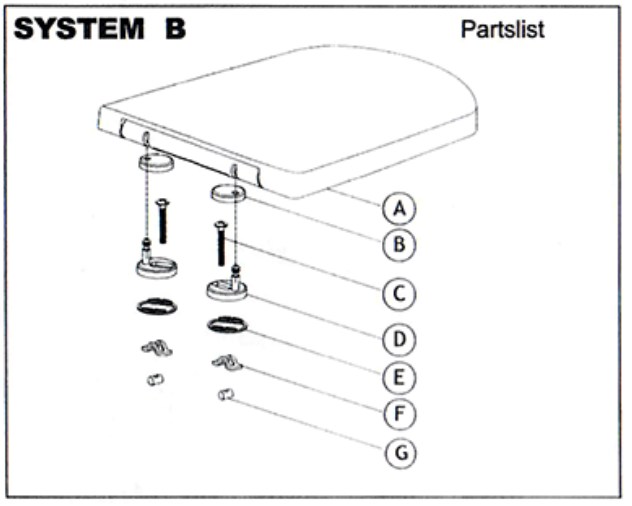
SYSTEM B
Partslist
A
B
C
D
E
F
G

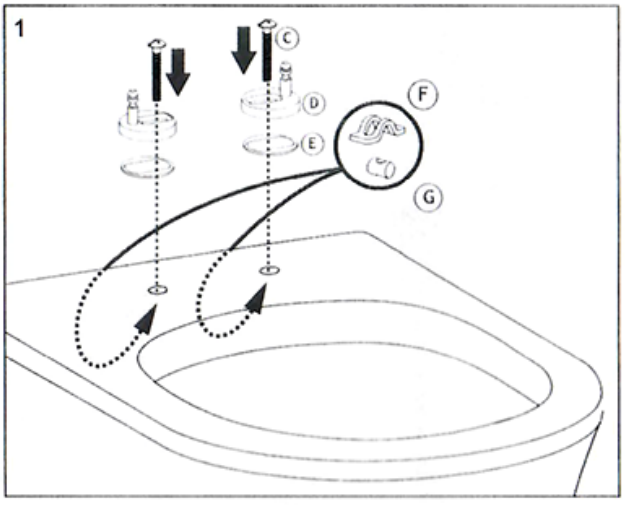
1
C
D
E
F
G

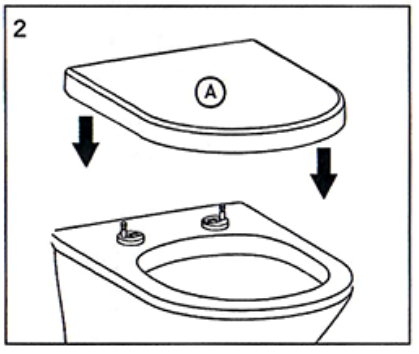
2
A

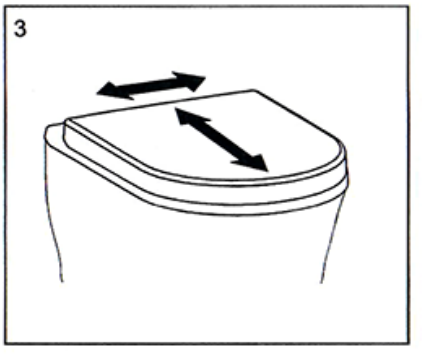
3

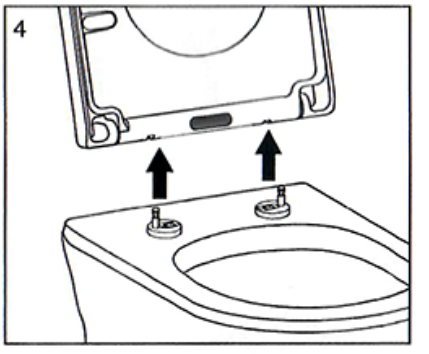
4

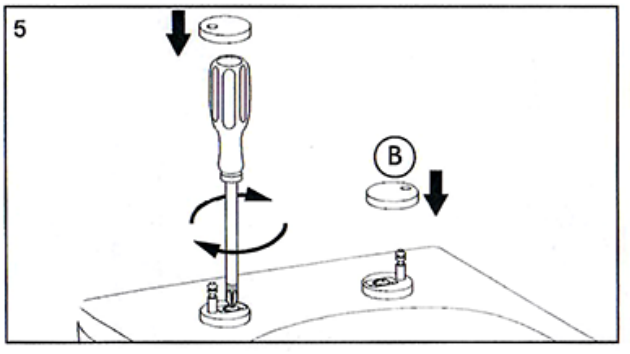
5
B

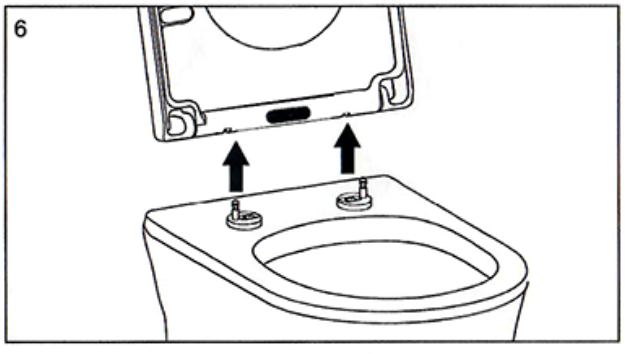
6