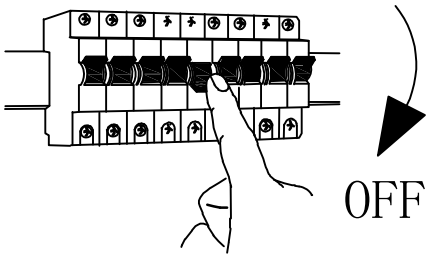

A

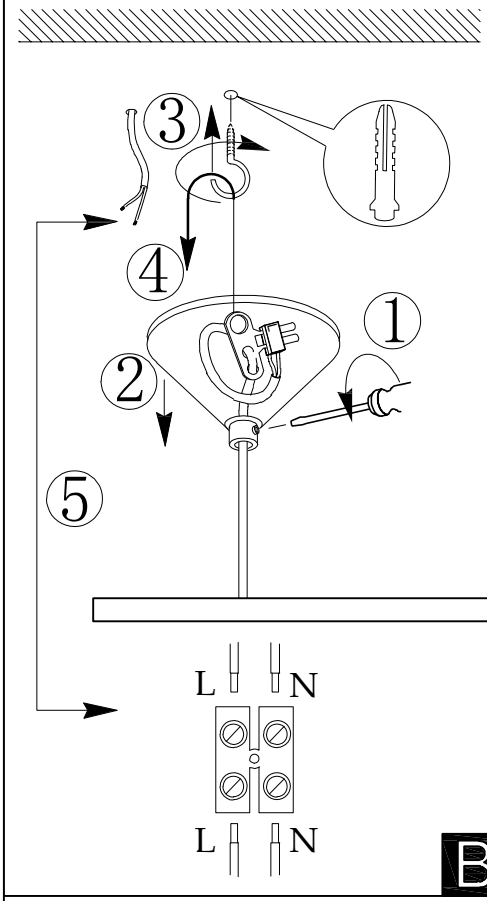

B

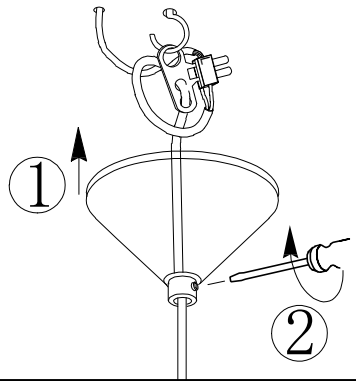

C

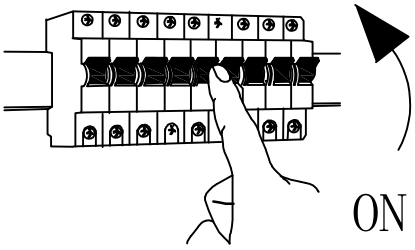

E

D

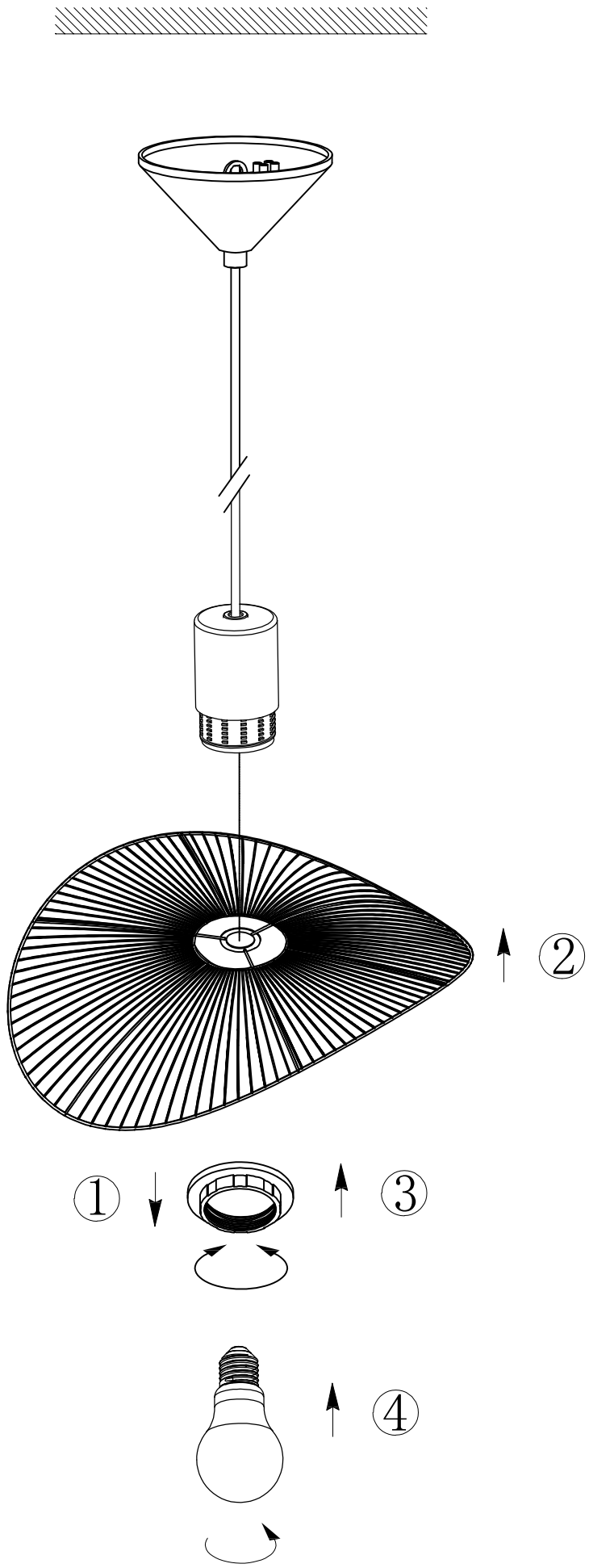

B300143, B300144