Approved by		Rev	Date
Checked by		Rev	Date
Checked by		Rev	Date

BACKSPLASH 640X3000X9MM

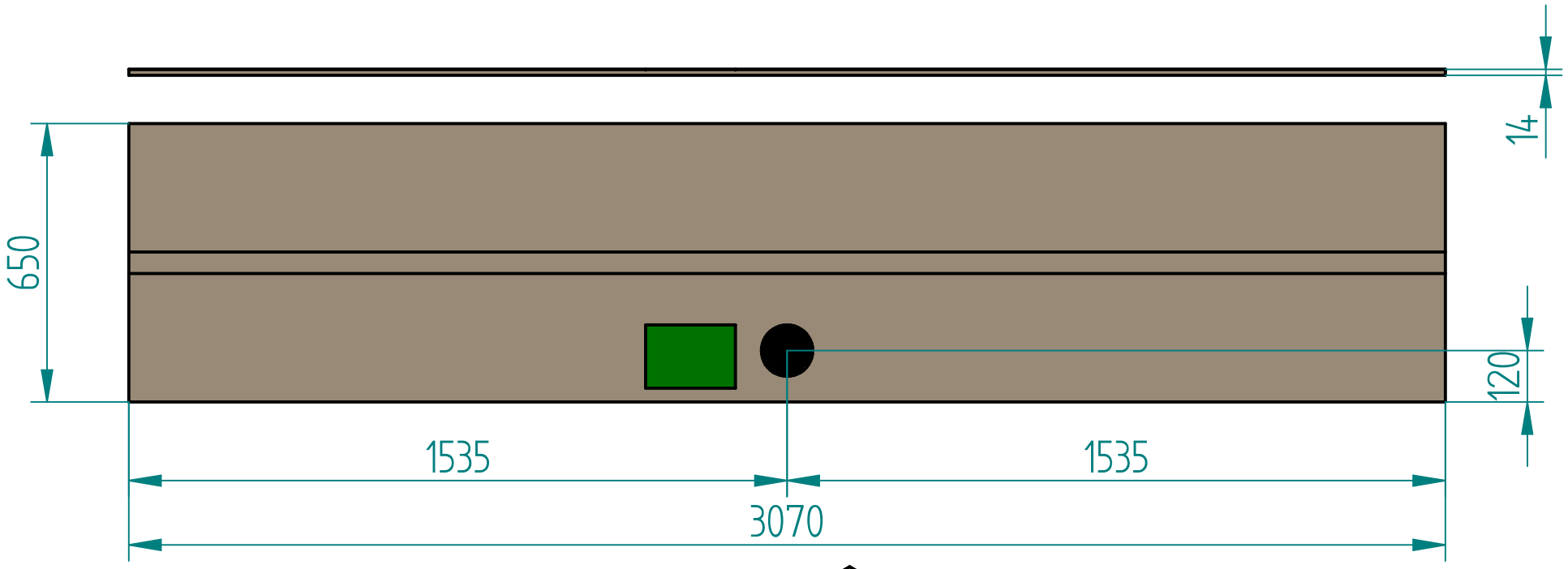

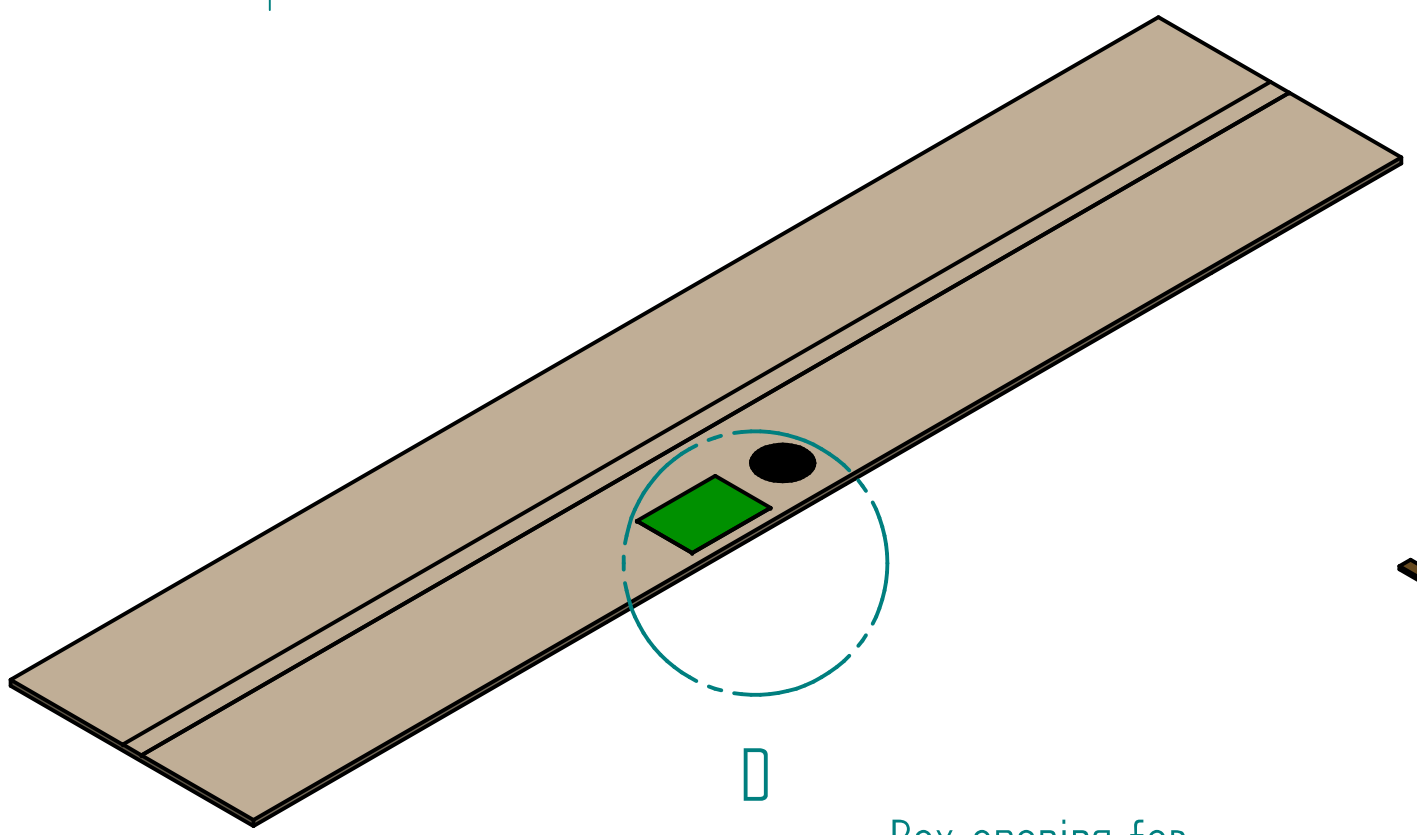

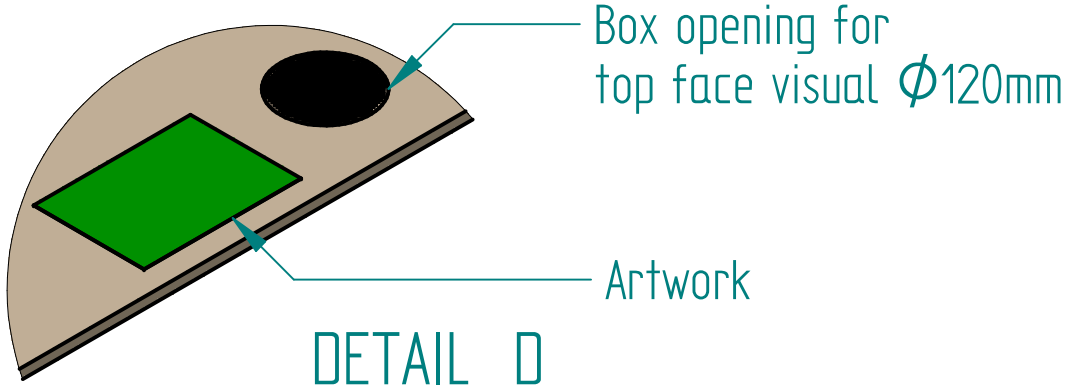

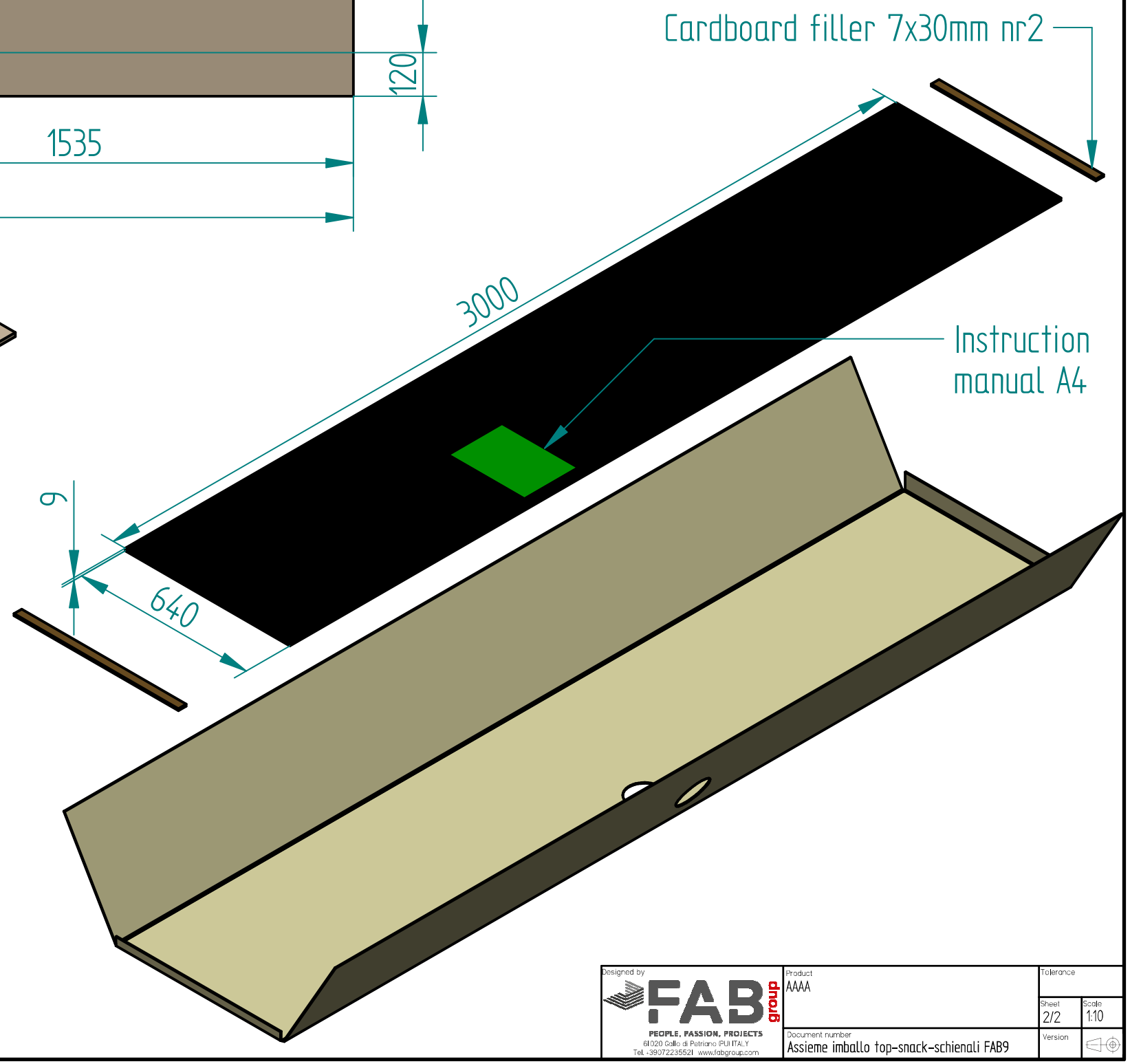

Designed by	Product	Tolerance	
FAB group PEOPLE, PASSION, PROJECTS 61020 Gallo di Petriano (PU) ITALY Tel. +39 0722 35521 www.fabgroup.com	AAAA	Sheet 2/2	Scale 1:10
	Document number Assieme imballo top-snack-schienali FAB9	Version	