Wiring busbars

TECHNICAL DATA		
Rated operating voltage (Ue):	(V)	400 a.c.
Conditional short-circuit current conditioned by fuse (Icc):	(kA)	25 (gL 100)
Rated impulse withstand voltage (Uimp):	(kV)	4

Wiring busbars for MTC circuit breakers

GW 96 507 F- 13 MOD. - 63A

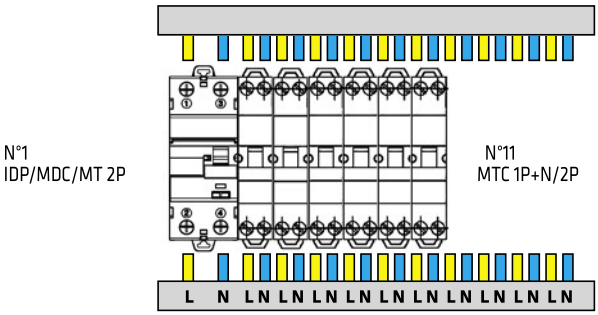

GW 96 500 - GREY - 13 MOD. - 80A
GW 96 501 - BLUE - 13 MOD. - 80A
GW 96 988 - WHITE - L=1 MT. - 80A

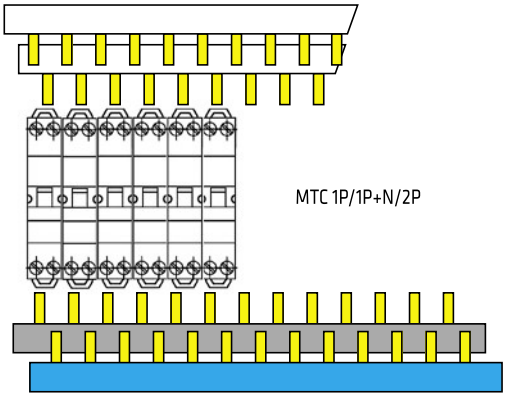

GW 96 503

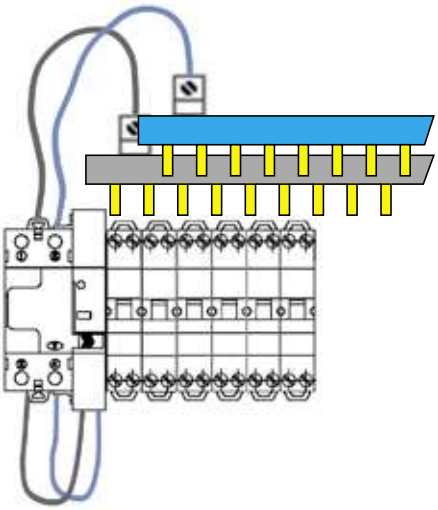

Wiring busbars for MT/MDC/IDP circuit breakers and switch-disconnectors with red lever

GW 96 984 – 12 MOD. – 63A
GW 96 988 – 1 MT. – 80A

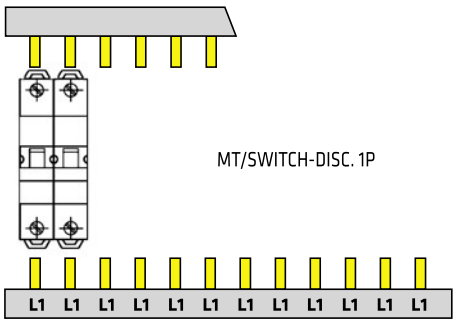

GW 96 985 – 12 MOD. – 63A
GW 96 989 – 1 MT. – 63A

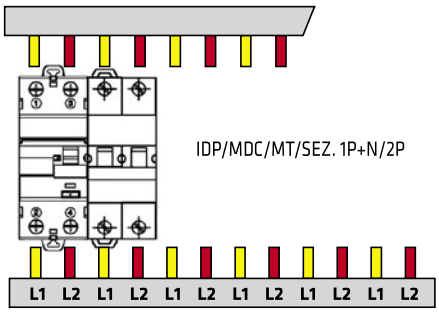

For technical information contact the Technical Assistance Service or visit gewiss.com