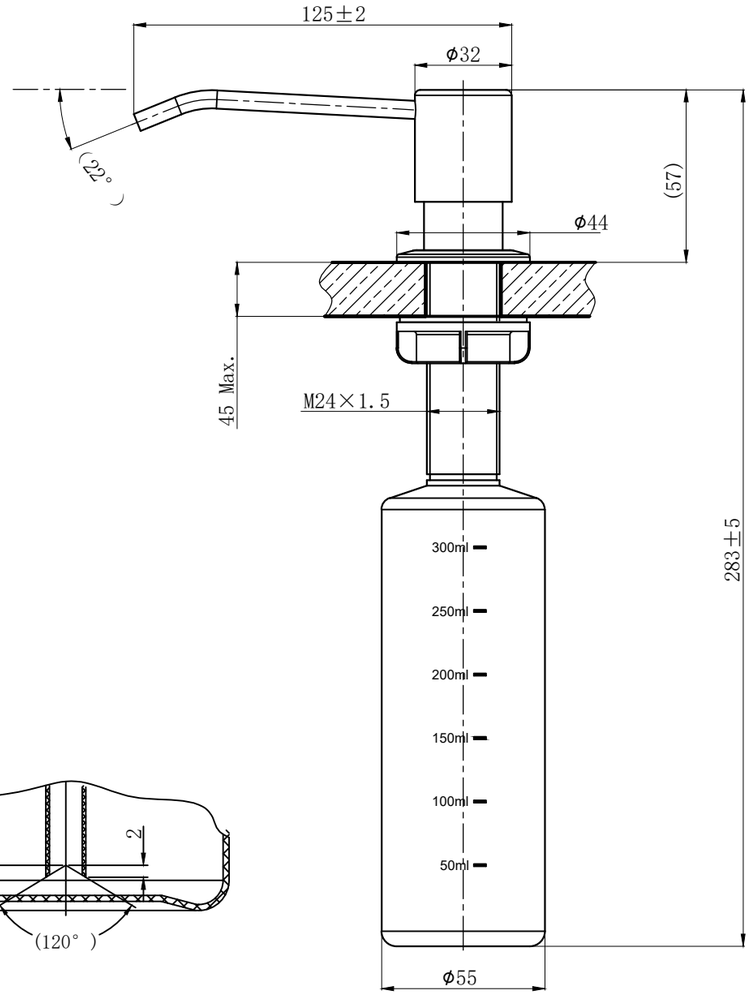





I
1:2

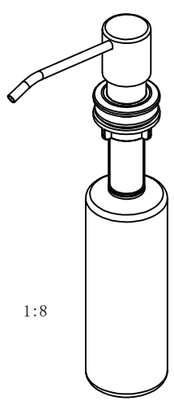

1:8

| Matrix code | Ref | Designation | Material grade | Quantity | Weight(KG) | Dimension(mm) | Supplier Reference | Finishings Colour |
|---|---|---|---|---|---|---|---|---|
| 2025R17P08-0036 | 1 | Soap dispensor | SUS304 | 1 | 0.13 | 283*125*55 | PD24-P | Black |

Following general tolerances are applicable to all dimensions without any tolerances indicated specifically on the drawing.

GB/T 1804-m

| 0.5-6 | 6-30 | 30-120 | 120-400 | Angle |
|---|---|---|---|---|
| ±0.1 | ±0.2 | ±0.3 | ±0.5 | ±1° |

| | | | | | |
|---|---|---|---|---|---|
| Product/Serie designation (as per Synnertrade/Specs) | | | | Material grade steel SUS304 | |
| GENERAL DRAWING | | | | All dimensions in mm. | |
| 2025R17P08-0036 | | | | | |
| EAN (update when referencing is done) | | | | | |
| Format A3 | | | | | |
| Scale 1:3 | | | | | |
| Zhuhai Dali Kitchen &Bathroom Technology CO.,Ltd. | V3 | 11/03/2024 | Drawing creation | Weitai Chen | YYY |
| Supplier Reference | PD24-P | Date | Update description | Done by | Checked by |

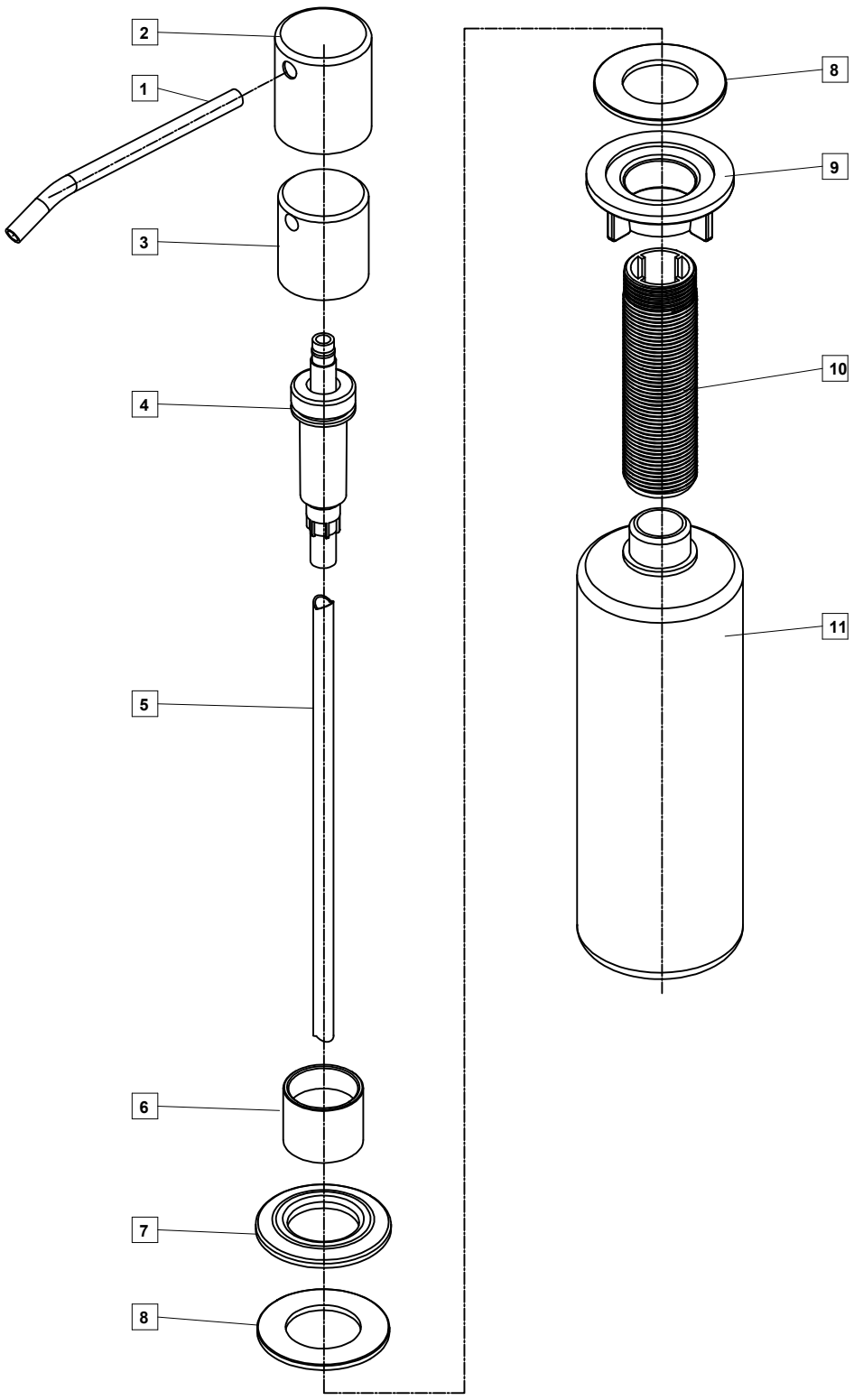


| Ref | Designation | Material grade | Quantity | Weight(g) | Dimension(mm) | Finishings Colour |
|---|---|---|---|---|---|---|
| 1 | Spout | SUS304 | 1 | 6.6 | φ6*102 | Brushed |
| 2 | Pressed cover | SUS304 | 1 | 26.8 | φ32*37 | Brushed |
| 3 | Core | PP | 1 | 4.6 | φ30*33 | White |
| 4 | Pump | PP | 1 | 6.8 | φ21*88 | White |
| 5 | Straw | PVC | 1 | 1.8 | φ6*175 | White |
| 6 | Bush | SUS304 | 1 | 19.4 | φ26*21 | Brushed |
| 7 | Base | SUS304 | 1 | 8.4 | φ44*4 | Brushed |
| 8 | Washer | NBR | 2 | 6.4 | φ42*2 | Black |
| 9 | Fixing Bushing | ABS | 1 | 14.3 | φ48*16 | Black |
| 10 | Threaded tube | ABS | 1 | 11.9 | φ24*48 | Black |
| 11 | Bottle | PE | 1 | 26.3 | φ55*165 | White |

| Matrix code | Ref | Designation | Material grade | Quantity | Weight(kg) | Dimension(mm) | Supplier Reference | Finishings Colour |
|---|---|---|---|---|---|---|---|---|
| 2025R17P08-0036 | 1 | Soap dispensor | SUS304 | 1 | 0.13 | 283*125*55 | PD24-P | Black |

| Following general tolerances are applicable to all dimensions without any tolerances indicated specifically on the drawing. | GB/T 1804-m | 0.5-6 | 6-30 | 30-120 | 120-400 | Angle |
|---|---|---|---|---|---|---|
| | | ±0.1 | ±0.2 | ±0.3 | ±0.5 | ±1° |

| Product/Serie designation (as per Synnertrade/Specs) | | | | | | Material grade steel SUS304 | |
|---|---|---|---|---|---|---|---|
| GENERAL DRAWING | | | | | | | |
| 202SRIFP08-0036 | | | | | | | |
| EAN (update when referencing is done) | | | | | | | |
| Format A3 | | | | | | | |
| Scale 1:2 | | | | | | | |
| Zhuhai Dali Kitchen &Bathroom Technology CO.,Ltd. | V1 | 11/01/2024 | Drawing creation | | | Weitai Chen | YYY |
| Supplier Reference | PD24-P | Date | Update description | | | Done by | Checked by |