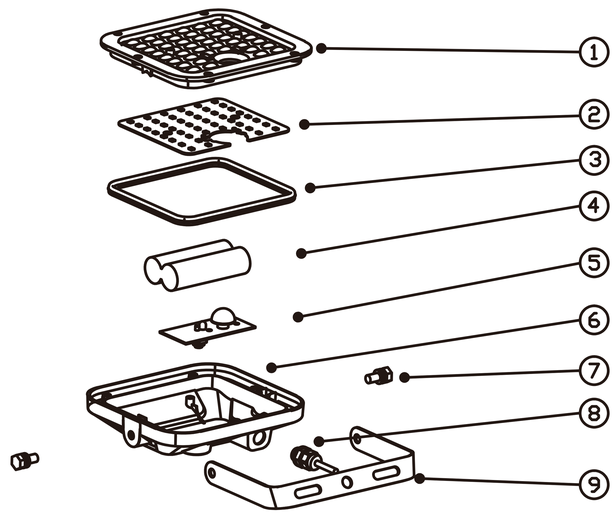

Number	Part Name	Specification/ Material
①	Lens	ABS
②	PCB board	Aluminum
③	Rubber ring	Silicone
④	Battery	Li-ion 18650,3600mah, 13.32Wh
⑤	Controller	Fiberglass
⑥	Housing	ABS+PC
⑦	Screws	M6*16mm, 304
⑧	PG connector	Waterproof, PG5,M10*1.5mm
⑨	Bracket	Iron+painting

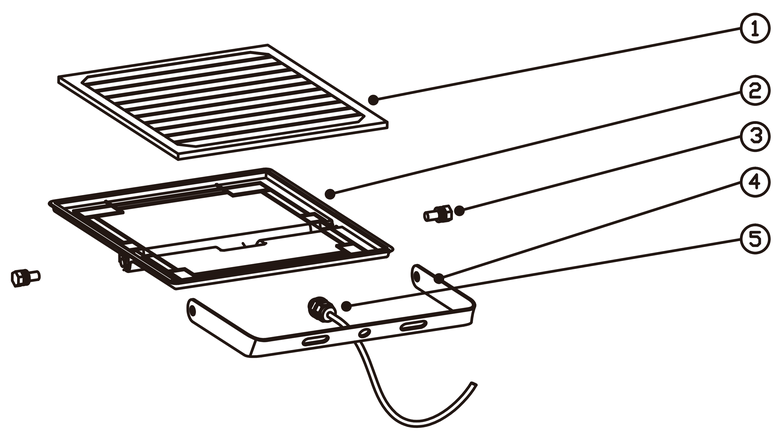

Number	Part Name	Specification/ Material
①	Solar Panel	Tempered glass, monocrystalline silicon
②	Frame	Aluminum, black
③	Screws	M6*16mm, 304
④	Bracket	Aluminum, black
⑤	PG connector	Waterproof, PG5,M10*1.5mm