90300

ASSEMBLY INSTRUCTIONS FOR OUTDOOR TABLE









COZINESS BY COZZE

FIND A VIDEO ON HOW TO ASSEMBLE THE OUTDOOR TABLE AT COZZEBBQ.COM/ASSEMBLY

cozze®

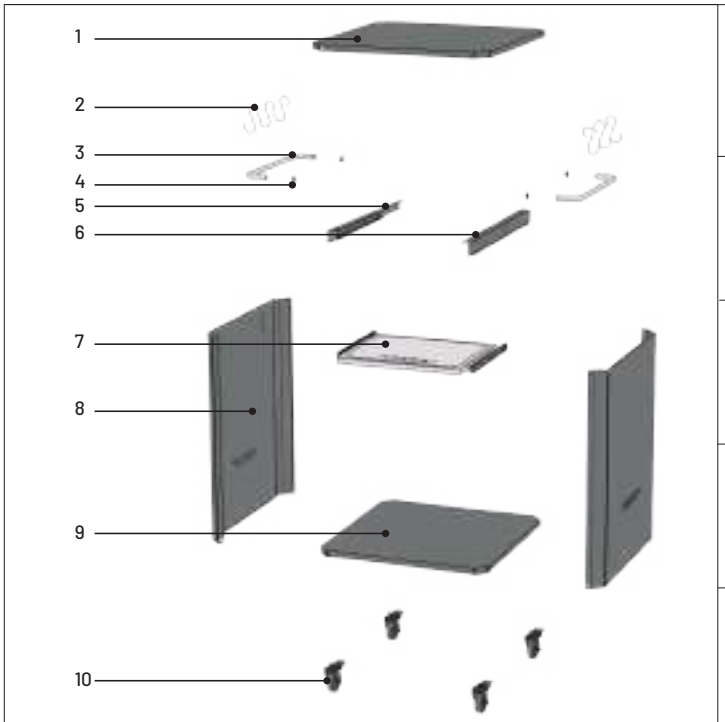

1		*1	6		*1
2		*6	7		*1
3		*2	8		*2
4		*4	9		*1
5		*1	10		*4

A	M6*16 	*4	B	M6*12 	*28	L	M4*8 	*4	K	Φ16*Φ6.5 	*4





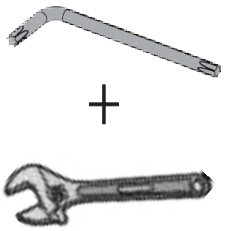

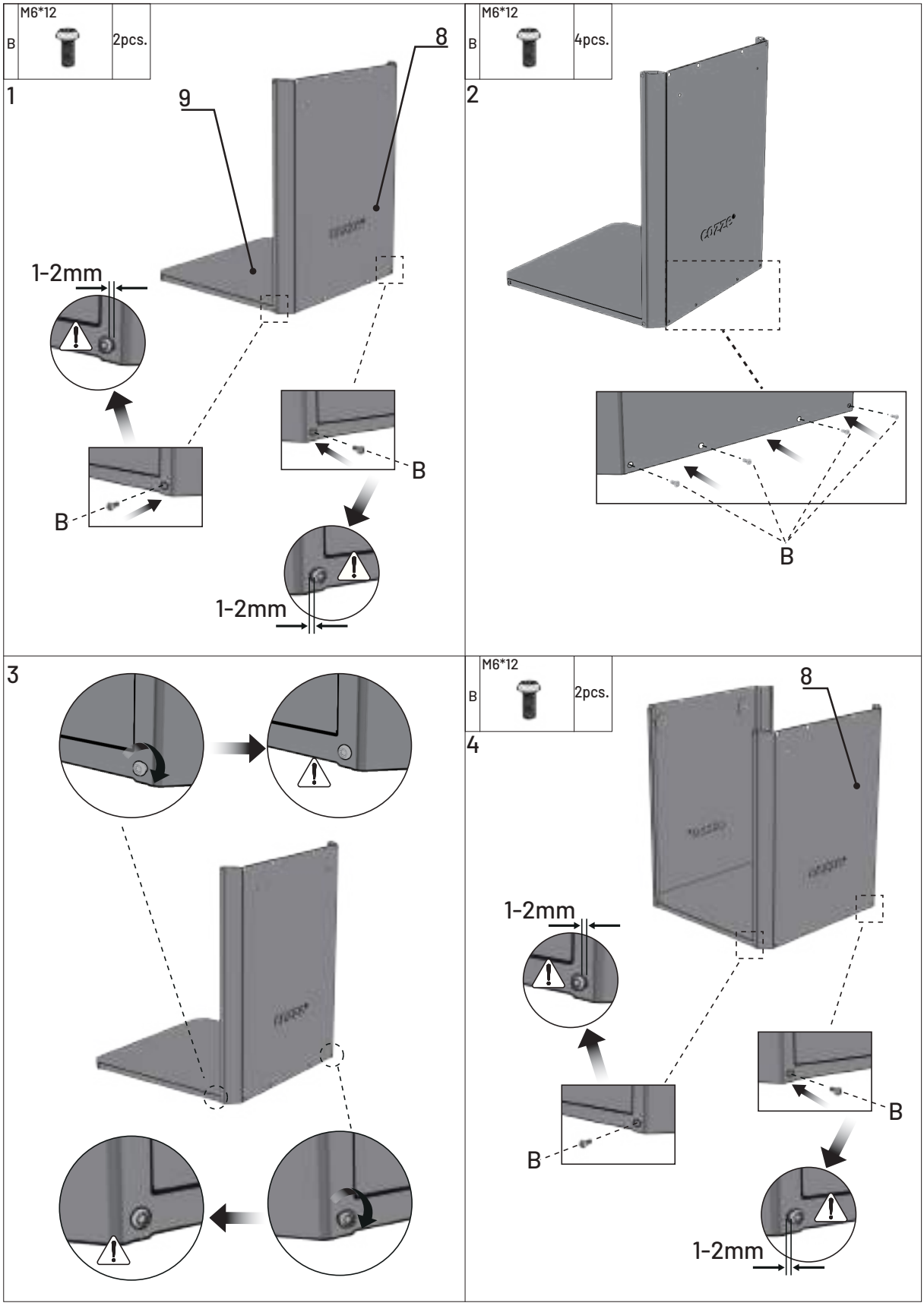
B
M6*12
2pcs.
1
9
8
1-2mm
B
B
1-2mm
B
M6*12
4pcs.
2
B
3
B
M6*12
2pcs.
4
8
1-2mm
B
B
1-2mm

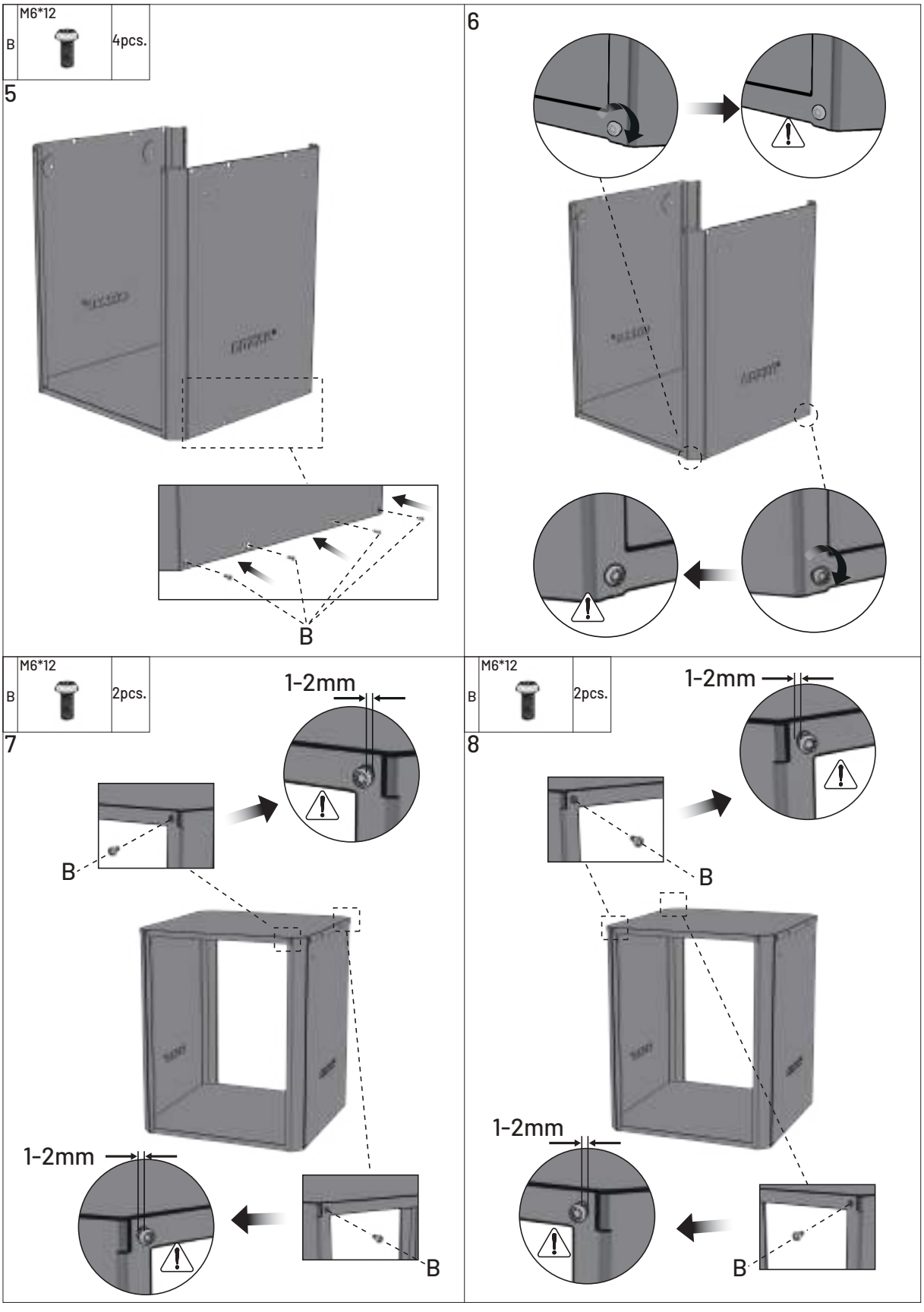
B
M6*12
4pcs.
5
B
6
B
M6*12
2pcs.
7
1-2mm
B
1-2mm
B
M6*12
2pcs.
8
1-2mm
B
1-2mm
B

B	M6*12 	8pcs.

9

10

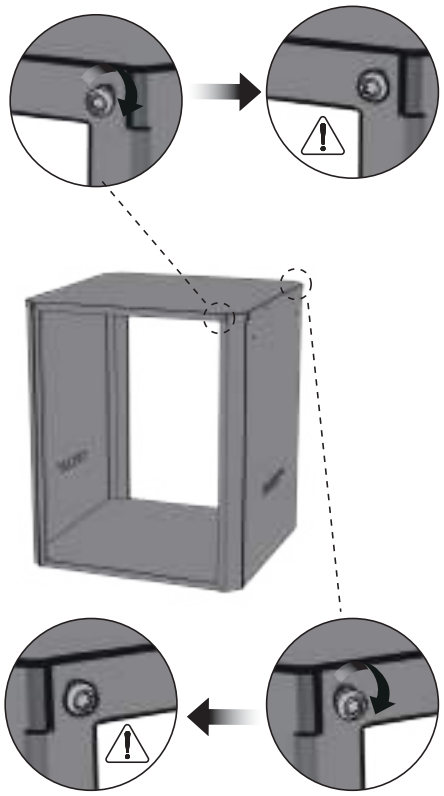

11

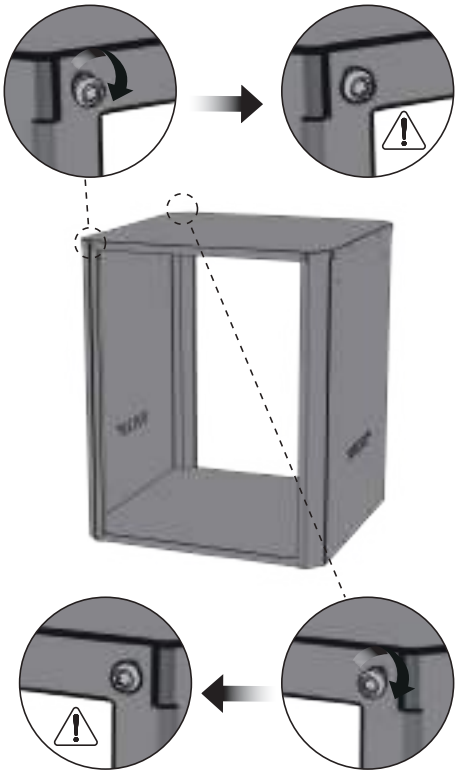

12

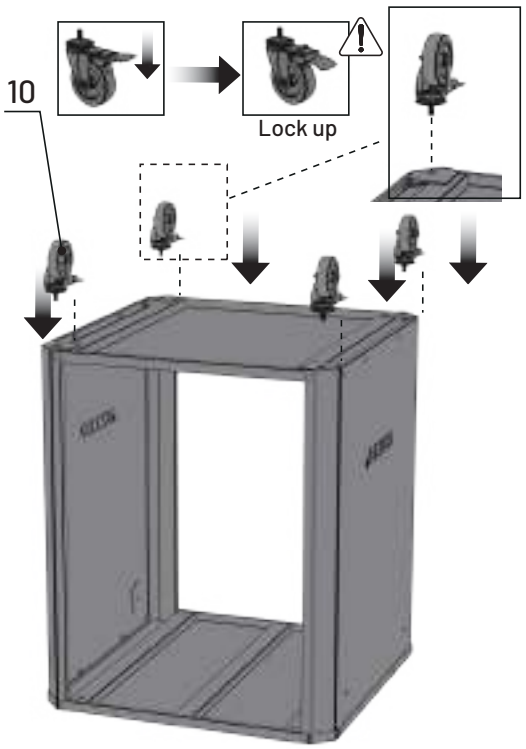

B	M6*12	2pcs.	L	M4*8	2pcs.

13

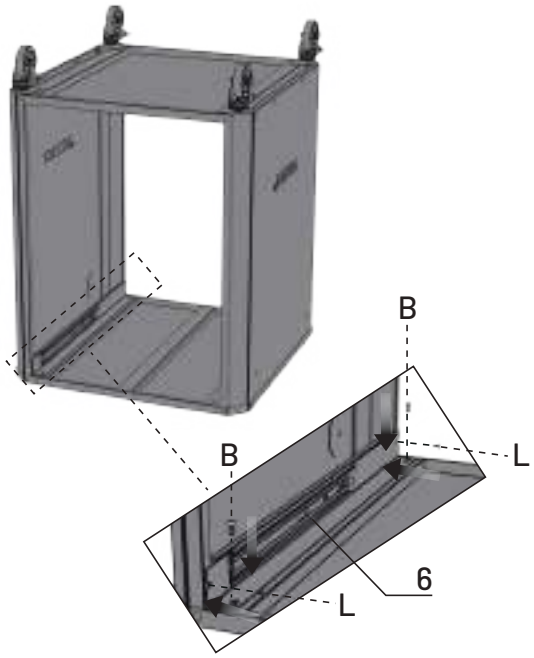

B	M6*12	2pcs.	L	M4*8	2pcs.

14

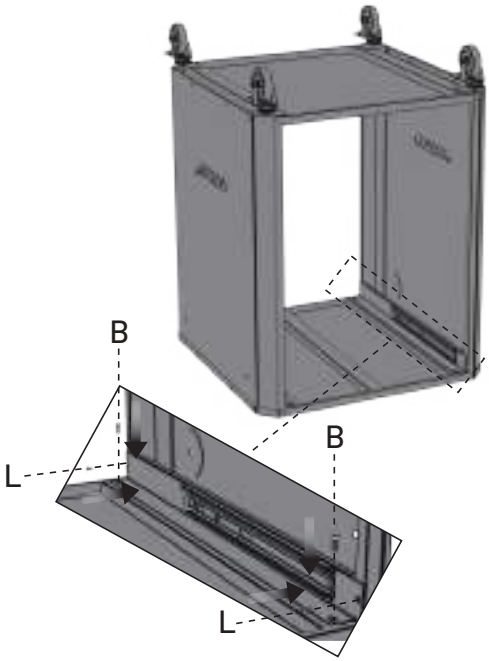

15

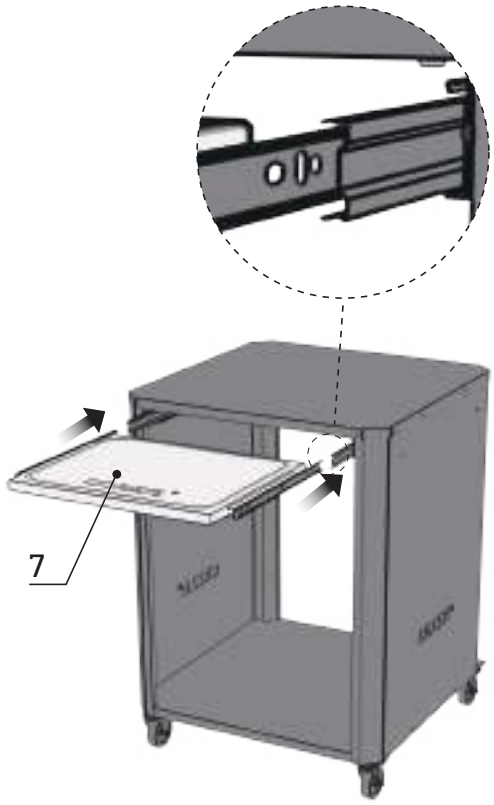

16

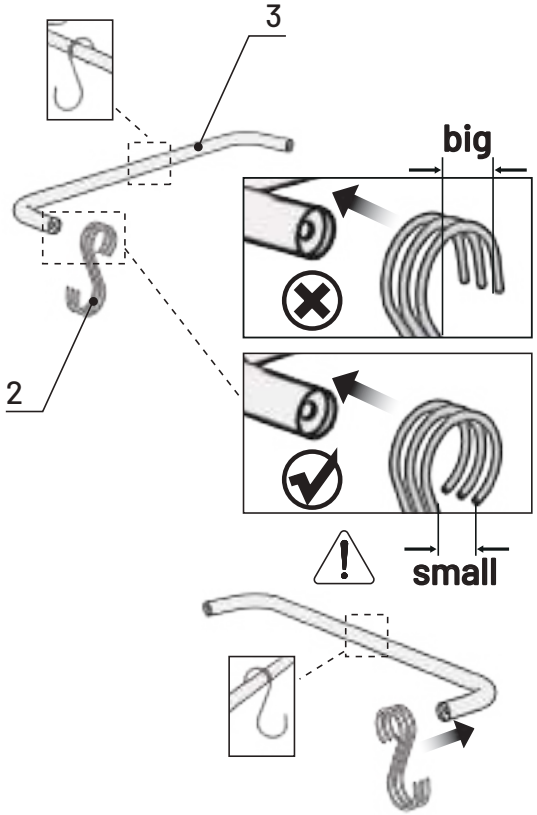


CHILLNESS
BY COLLE

90300



FIND A VIDEO ON HOW TO ASSEMBLE THE OUTDOOR TABLE AT COZZEBBQ.COM/ASSEMBLY

Manufactured by
Millarco International A/S
Rokhøj 26, 8520 Lystrup - Denmark
millarco.com
cozzebbq.com

cozze®