iSC GmbH
Customer Service
Eschenstraße 6
94405 Landau/Isar

Telephone: +49 9951 959 3019
Email: info@isc-gmbh.info

Cordless Multifunctional Tool GE-HC 18 Li T-Solo

Article number: 3410800
Ident number: 21021

Spare parts

Pos	Art.	Ident number	Product Name
	3410801	00010	GE-HC 18 Li T Modul Motor
	3410802	00010	GE-LC 18 Li T Modul Kettensäge
	3410803	00010	GE-HH 18 Li T Modul Heckensche

GE-HC 18 Li T Modul Motor

Article number: 3410801
Ident number: 00010

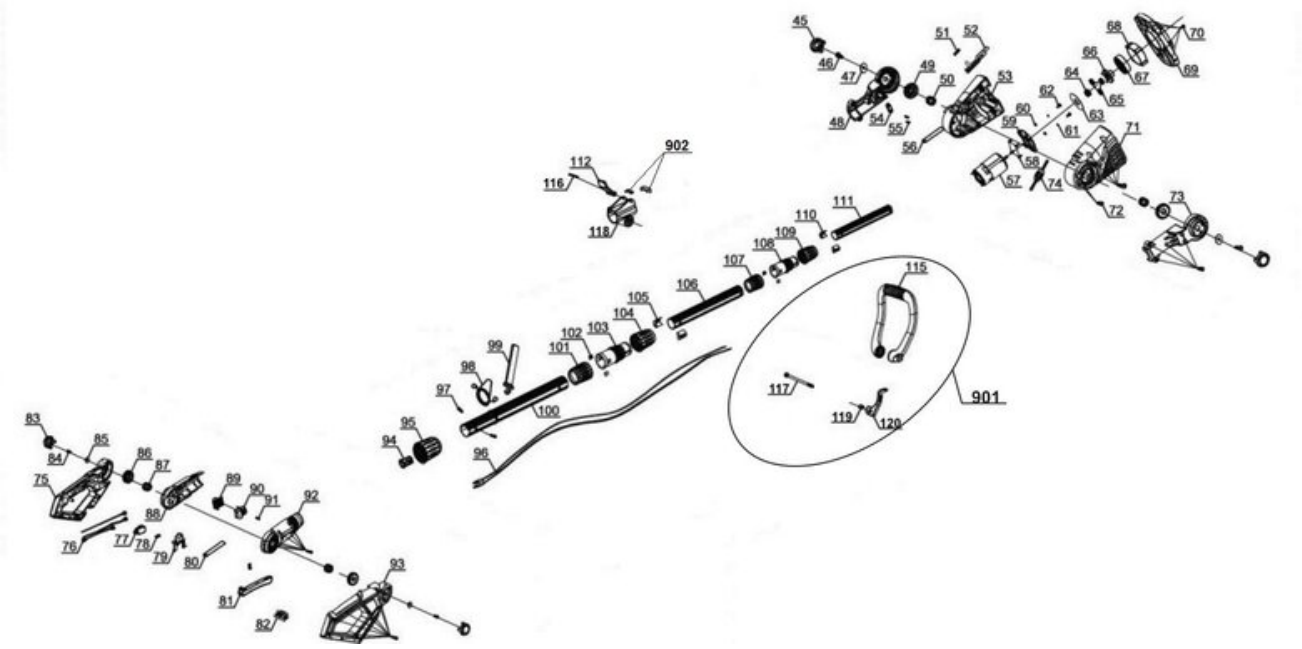

Spare parts

Pos	Art.	Ident number	Product Name
	341081002790	00000	Manual
	341081002792	00000	Safety instructions
	341080101791	00000	data label
	341080101045	00000	Rotation Button
	341080101046	00000	S.T. Screw
	341080101047	00000	Gasket
	341080101048	00000	Rotation Connetor Left Housing
	341080101049	00000	Rotating Gear
	341080101050	00000	Spring for Button
	341080101051	00000	Spring for Lever
	341080101052	00000	Function Change Locker
	341080101053	00000	Left Housing
	341080101054	00000	Cable Clamp
	341080101055	00000	S.T. Screw
	341080101056	00000	Cotton Varnished Sleeve
	341080101057	00000	motor
	341080101058	00000	S.T. Screw
	341080101059	00000	Motor Support
	341080101060	00000	Flat Washer
	341080101061	00000	Spring Washer
	341080101062	00000	Screw
	341080101063	00000	Washer
	341080101064	00000	Motor Gear
	341080101065	00000	Planet Gear
	341080101066	00000	Planet Gear Frame
	341080101067	00000	internal gear circle
	341080101068	00000	Planet Gear Housing
	341080101069	00000	Connection Bracket
	341080101070	00000	S.T. Screw
	341080101071	00000	Right Housing
	341080101072	00000	S.T. Screw
	341080101073	00000	Rotation Connetor Right Housin
	341080101074	00000	Inductor
	341080101075	00000	Handle Left Housing
	341080101076	00000	Internal Wire
	341080101077	00000	Switch
	341080101078	00000	Spring for Trigger
	341080101079	00000	Switch-Off Button
	341080101080	00000	Cotton Varnished Sleeve
	341080101081	00000	Switch Trigger
	341080101082	00000	bracket and terminal
	341080101083	00000	Rotation Button
	341080101084	00000	S.T. Screw
	341080101085	00000	Flat Washer
	341080101086	00000	Rotating Gear
	341080101087	00000	Spring for Button
	341080101088	00000	Handle Rotation Connector Left
	341080101089	00000	Terminal Bracket Left
	341080101090	00000	Terminal Bracket Right
	341080101091	00000	S.T. Screw
	341080101092	00000	Handle Rotation Connector Righ
	341080101093	00000	Handle Right Housing
	341080101094	00000	Terminal Socket
	341080101095	00000	Handle Lock Sleeve
	341080101096	00000	Terminal
	341080101097	00000	S.T. Screw
	341080101098	00000	Belt Buckle
	341080101099	00000	Belt
	341080001899	00000	color box V1
	341080002899	00000	color box V2
	341081002899	00000	color box GE-LC 18 Li T-Solo
	341086602899	00000	color box GE-HH18/45 Li T-Solo
	341080503099	00000	color box for 3410805_03
	341080101100	00000	Ø35 AL Tube

Pos	Art.	Ident number	Product Name
	341080101101	00000	Ø35 Tube Fixing Sleeve
	341080101102	00000	Position Block
	341080101103	00000	Ø35 Tube Connector
	341080101104	00000	Ø35 Tube Lock Sleeve
	341080101105	00000	Ø30 AL Tube insert
	341080101106	00000	Ø30 AL Tube
	341080101107	00000	Ø30 Tube Fixing Sleeve
	341080101108	00000	Ø30 Tube Connector
	341080101109	00000	Ø30 Tube Lock Sleeve
	341080101110	00000	Ø25.4 AL Tube insert
	341080101111	00000	Ø25.4 AL Tube
	341080101112	00000	Secondary Handle Lock Lever
	341080101116	00000	Pin
	341080101118	00000	Secondary Handle Base
	341080101901	00010	secondary handle assembly
	341080101902	00010	lock block

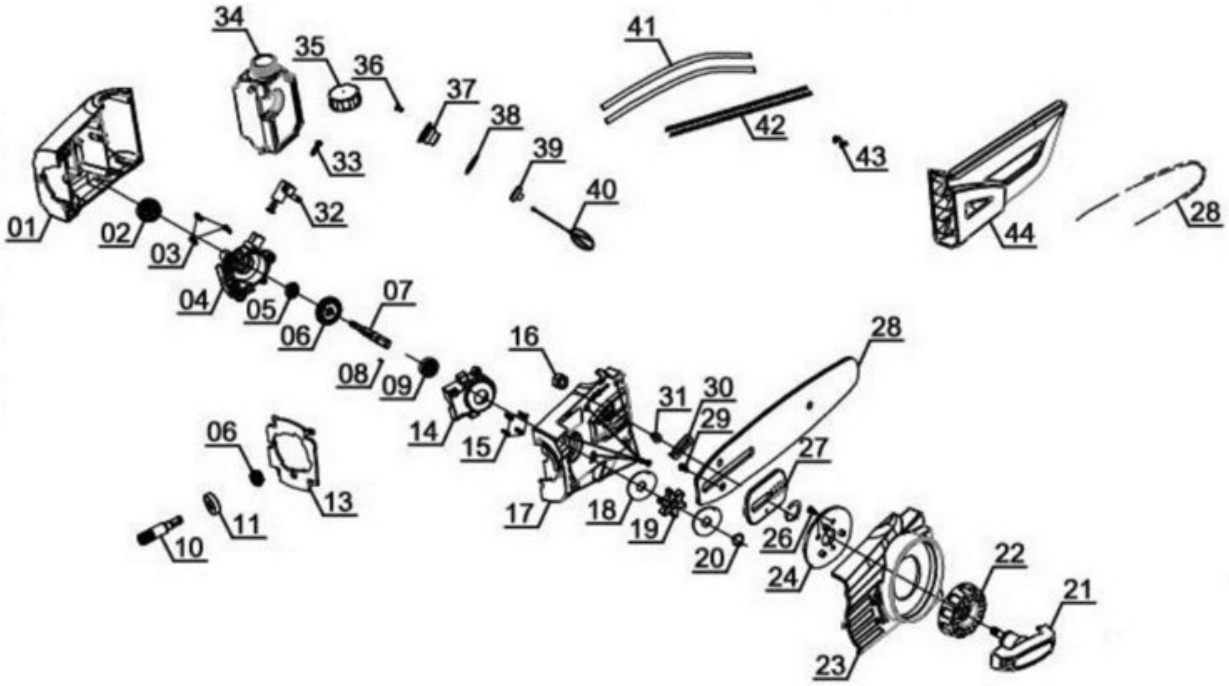
34
35
36
37
38
39
40
41
42
43
44
28
33
32
01
02
03
04
05
06
07
08
09
16
14
15
31
30
29
27
28
06
13
11
10
17
18
19
20
26
24
22
21
23

Spare parts

Pos	Art.	Ident number	Product Name
	341080201791	00000	data label
	341080201001	00000	Left Housing
	341080201002	00000	Eccentric wheel
	341080201003	00000	S.T. Screw
	341080201004	00000	Bottom Housing for Bevel Gear
	341080201005	00000	Bearing
	341080201006	00000	Bevel Gear
	341080201007	00000	Shaft for Large Bevel Gear
	341080201008	00000	Pin for Bevel Gear
	341080201009	00000	Bearing
	341080201010	00000	Spline Shaft
	341080201011	00000	Bearing
	341080201013	00000	Top connection bracket
	341080201014	00000	Upper Housing for Bevel Gear
	341080201015	00000	S.T. Screw
	341080201016	00000	Hexagon Nut
	341080201017	00000	Right Housing
	341080201018	00000	washer
	341080201019	00000	Six Tooths Sprocket
	341080201020	00000	Snap Ring
	341080201021	00000	Knob for Chain Cover
	341080201022	00000	Adjustment Knob for Chain
	341080201023	00000	Bar Cover
	341080201024	00000	Locker
	341080201025	00000	Screws
	341080201026	00000	C-Ring
	341080201027	00000	Locker Block for Bar
	341080201028	00000	bar with saw chain
	341080201029	00000	Screws
	341080201030	00000	Rubber Gasket for Oil Nozzle
	341080201031	00000	Oil Nozzle
	341080201032	00000	Oil Pump
	341080201033	00000	S.T. Screw
	341080201034	00000	Oil Tank
	341080201035	00000	Tank Cover
	341080201036	00000	One-way Valve
	341080201037	00000	Oil Indicator Base
	341080201038	00000	Rubber Ring
	341080201039	00000	Oil Indicator Locker
	341080201040	00000	Oil Indicator
	341080201041	00000	Oil Pipe
	341080201042	00000	Spring for Oil Pipe
	341080201043	00000	Snap Ring for Oli Pipe
	341080201044	00000	Bar Sleeve

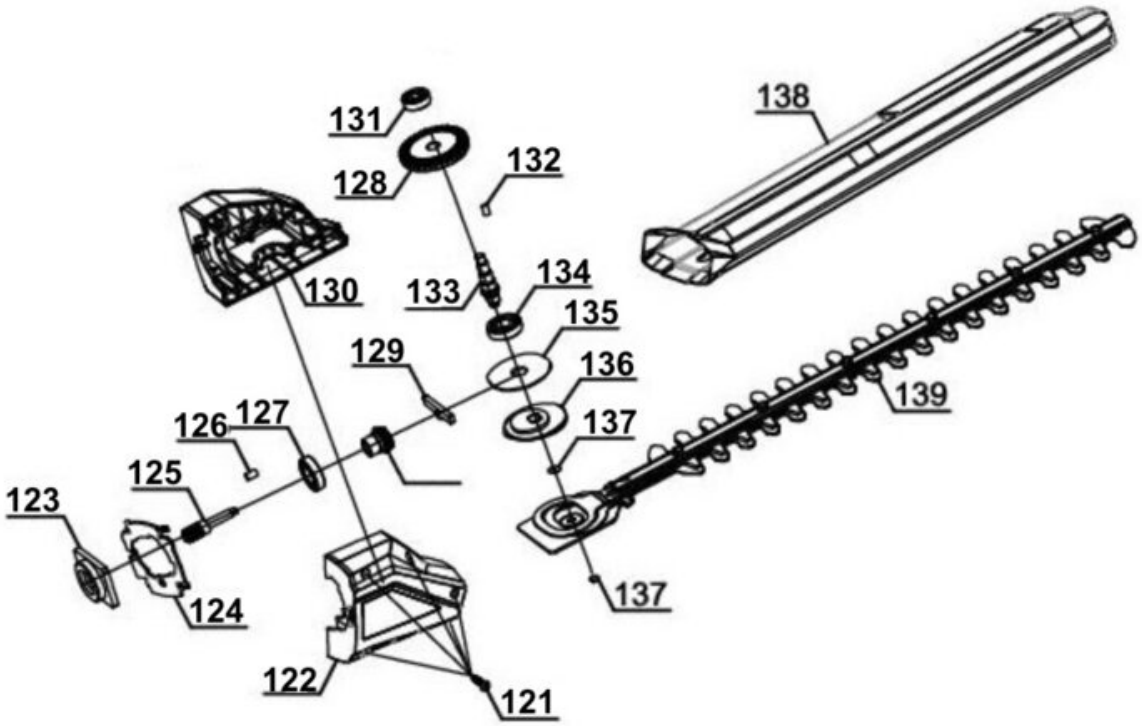
131
128
132
138
130
133
134
135
129
136
139
126
127
137
125
123
137
124
122
121

Spare parts

Pos	Art.	Ident number	Product Name
	341080301121	00000	S.T. Screw
	341080301122	00000	Right Housing for Hedge Trimme
	341080301123	00000	Bearing Base
	341080301124	00000	Top Connection Bracket
	341080301125	00000	Spline Shaft
	341080301126	00000	Flatkey
	341080301127	00000	Bearing
	341080301128	00000	Bevel Gear
	341080301129	00000	Spline Shaft Support Bar
	341080301130	00000	Left Housing of Hedge Trimmer
	341080301131	00000	Bearing
	341080301132	00000	Flatkey
	341080301133	00000	Gear Shaft
	341080301134	00000	Bearing
	341080301135	00000	plate disk
	341080301136	00000	Eccentric wheel
	341080301137	00000	Snap Ring
	341080301138	00000	Blade Sleeve
	341080301139	00000	Blade Assembly

secondary handle assembly

Article number: 341080101901
Ident number: 00010

Spare parts

Pos	Art.	Ident number	Product Name
	341080101115	00000	Secondary Handle
	341080101117	00000	M6 Bolt
	341080101119	00000	Nut
	341080101120	00000	Locker Lever

lock block

Article number: 341080101902
Ident number: 00010

Spare parts

Pos	Art.	Ident number	Product Name
	341080101113	00000	Secondary Handle Bottom Lock B
	341080101114	00000	Secondary Handle Upper Lock Bl