Rev	Design Change Note	Author	Date
A	Internal validation	RB	2023-06-19
001	First issue - proposal	RB	2023-07-03
002	Approved by client	RB	2023-10-20

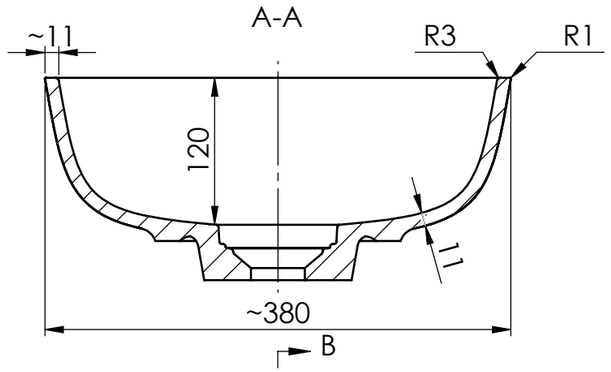

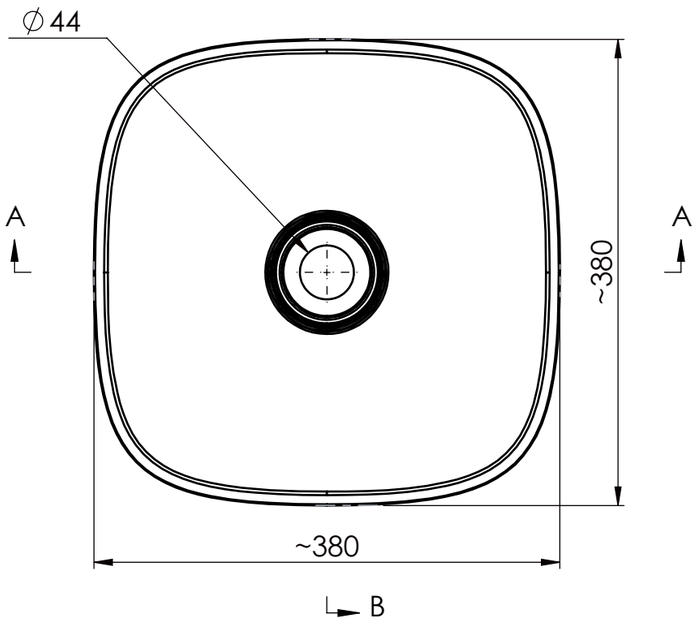

Bottom view/
Widok z dołu

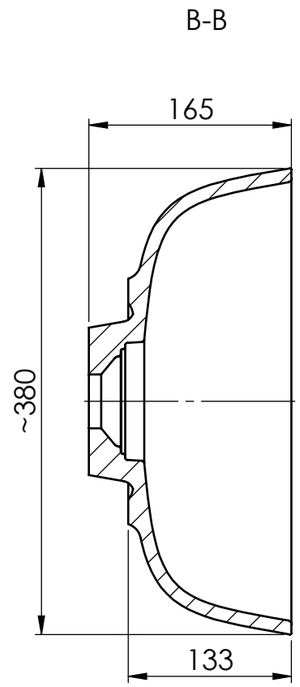

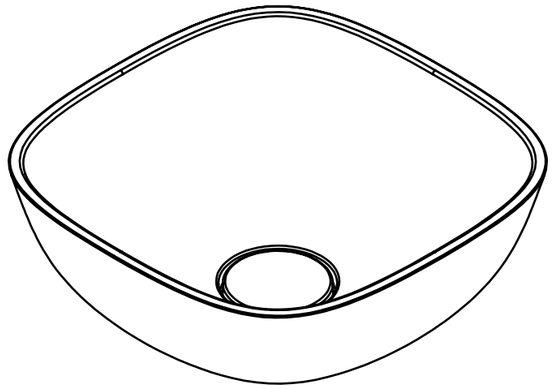

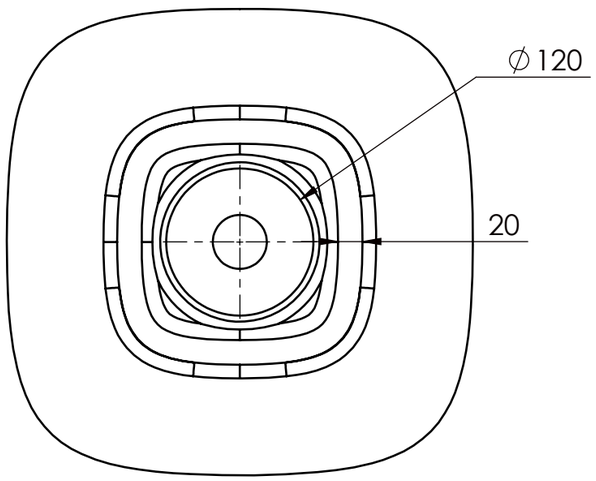

Notes/Uwagi:

1. Cover - see drawing 6254190100xx/Przykrywka - patrz rysunek 6254190100xx

Tolerance total	length	+3/0 mm
	width	+2/0 mm
	height	+2/-2 mm
Tol. height side walls	≤25 mm	+1/-1 mm
	>25 mm	+2/-2 mm
Tolerance holes location		+2/-2 mm
Tolerance holes diameter		+1/-1 mm
Tolerance plane bending		+1,5/-1,5 mm

Drawn by: Bączyk R	Created Date: 2023-06-19	Checked by: Wesoły K
Project status: Approved	Client: ADEO	

Art. Name: NOVA SQUARE 380
Art. No: 6410020410xx
Mould No: F1002041
Customer ID: 3127

Material volume[mm³]	Overflow	Taphole	Main dimensions L x W / H [mm]	Drain
2644927.51	NO	0	380 x 380 / 165	Cover
Surface area[mm²]	Sheet Size	Scale	Current revision	Scheet
448690.31	A3	1:5	002	1\1

MARmite

This document must not be copied without our written permission, and the contents thereof must not be imparted to a third party nor be used for any unauthorized purpose. Contravention will be prosecuted.