33169

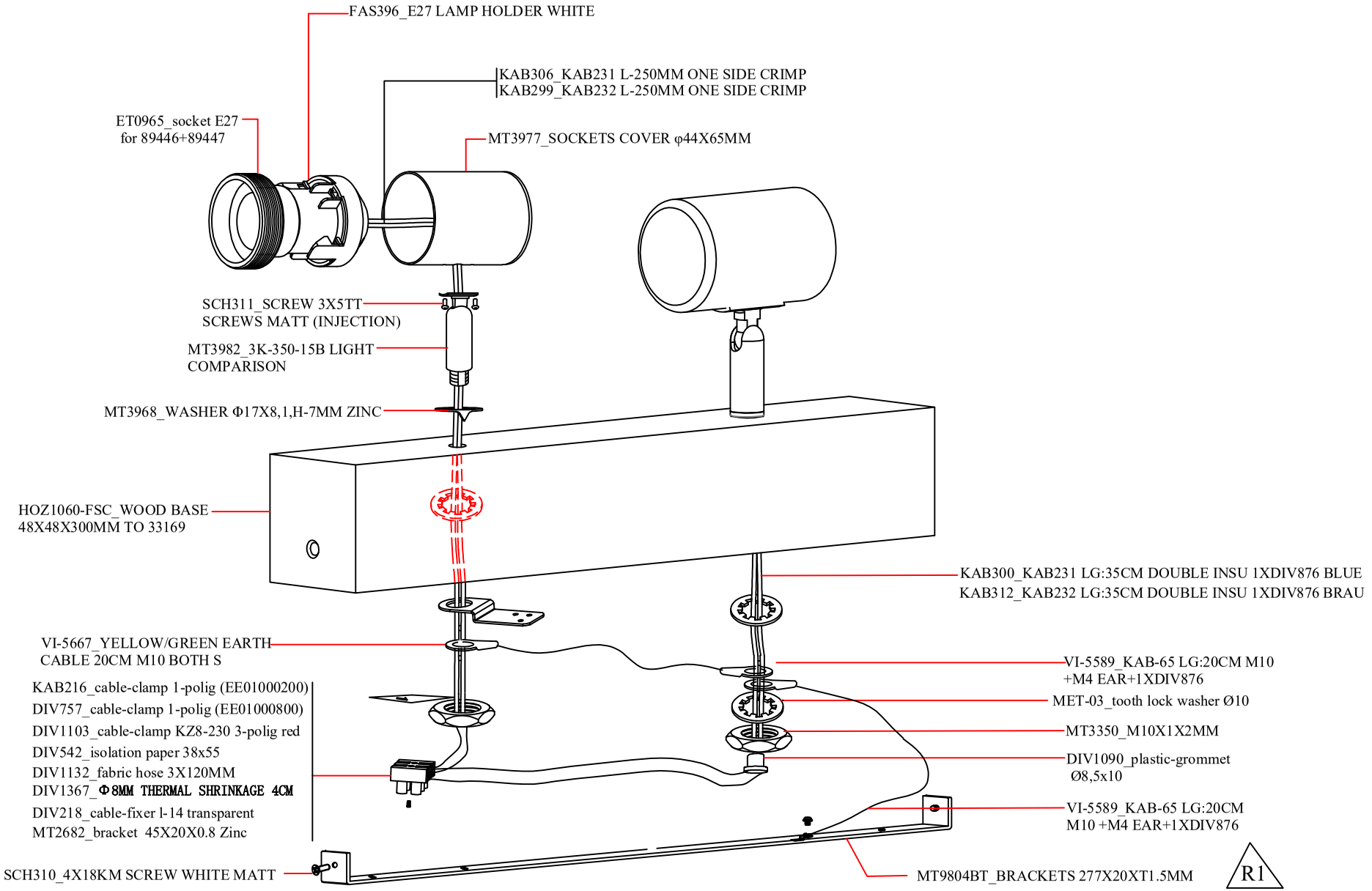

R1	MT9804ZN CHANGED TO MT9804BT, REFER ECN NO.-37/SEP-2022	SACHIN	07-10-2022
REV.	Modify Content	Modified By	Date

EGLO INDIA PRODUCTION PVT LTD

Plot No. - 286 TO 289 IMT BAWAL

Drawing/Date			Product Name	HL/2 SCHWARZ/EICHE-OPTIK 'TOWNSHEND-3'
Check / Date			Drawing Numbers.	33169_99483
Audit/Date			Responsible for engineers	
Approve/Date			Page 1 of 1	