1

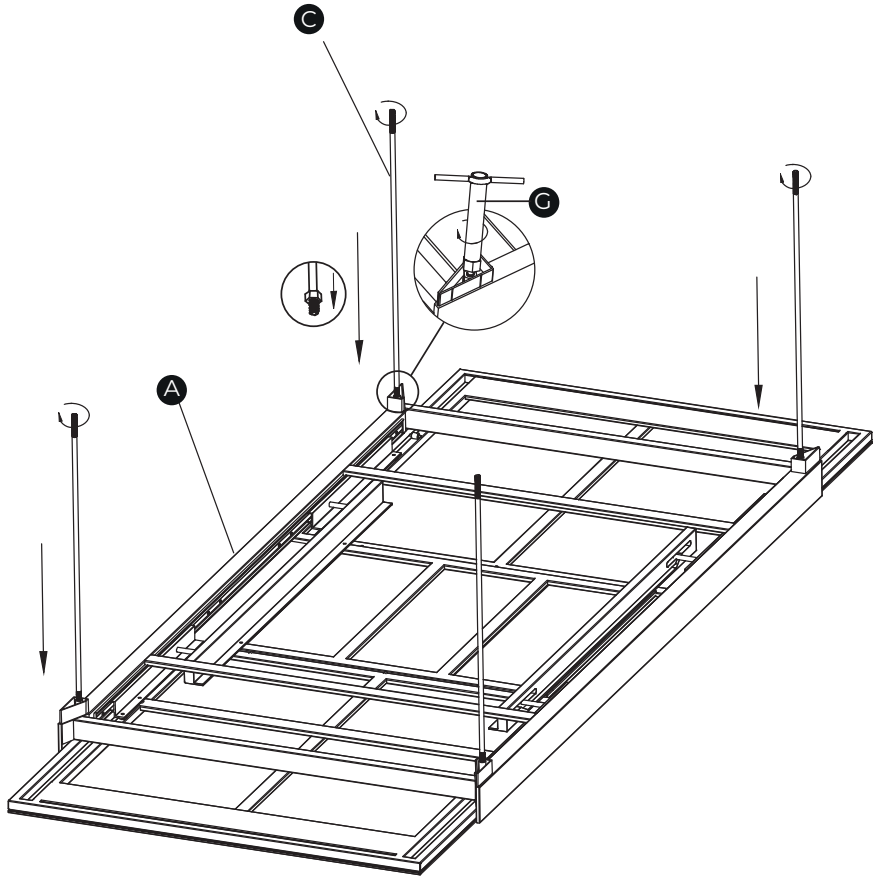

2

