MADRAS ELECTRIC IHC ENKI

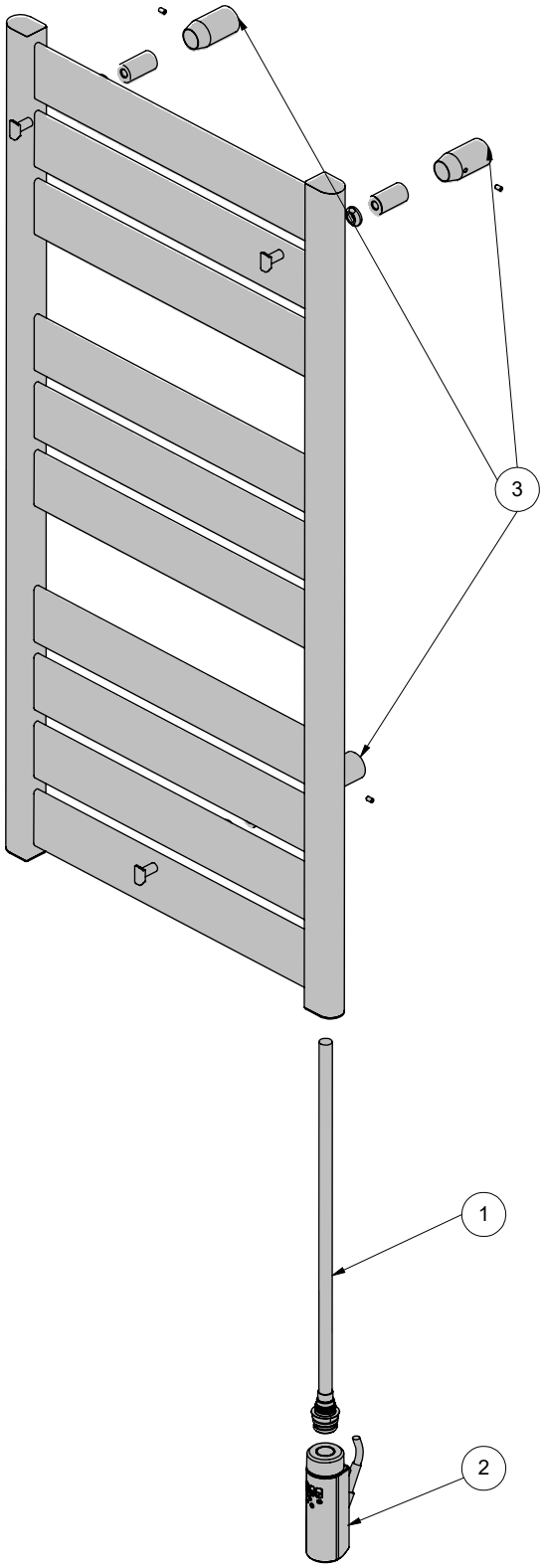

No	DESCRIPTION
1	Immersion heater
2	Controller IHC ENKI
3	Assembly set

A4