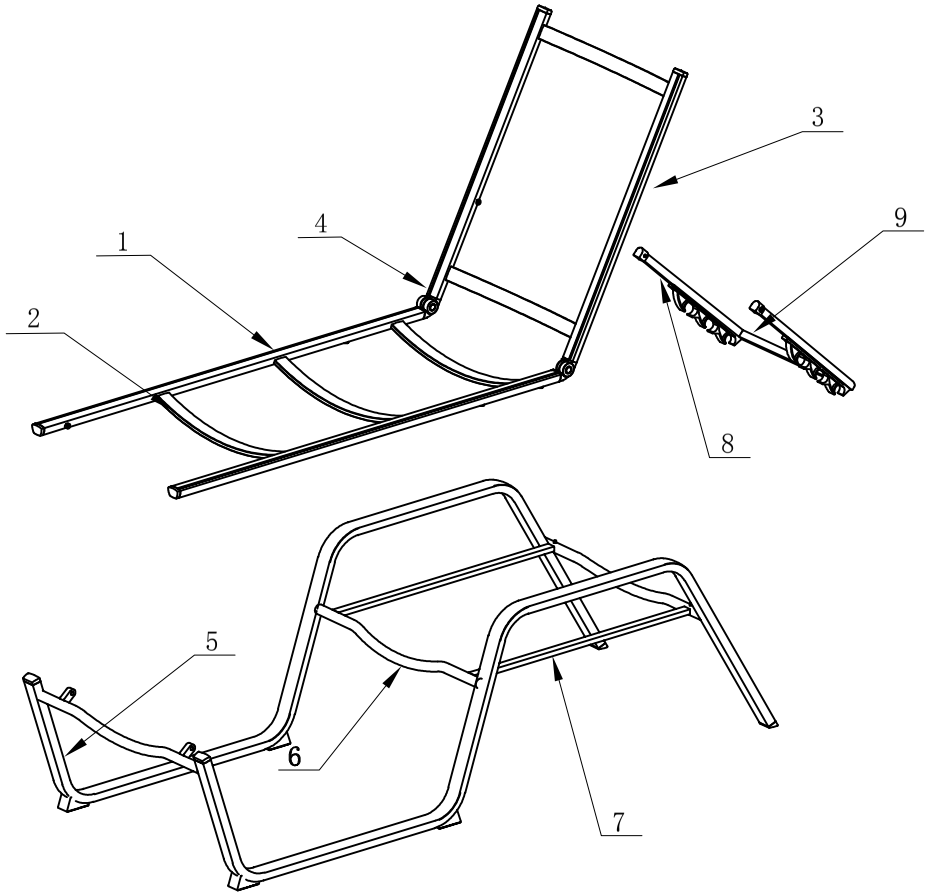

no	mould ref	part designation	qty	raw material	spec	source of raw material	% of recycled material	surface treatment	part net weiight
1	YJLD-1135	Seat through cloth tube	2	Aluminum	38*25*1.4*1200	Taizhou		powder coating	
2	YJLD-455	Seat support	3	Aluminum	36*14*1.2*505	Taizhou		powder coating	
3	YJLD-1135	Back wearing cloth tube	2	Aluminum	38*25*1.4*750	Taizhou		powder coating	
4	YJLD-455	Back support tube	2	Aluminum	36*14*1.2*495	Taizhou		powder coating	
5	YJLC-200	Foot tube	2	Aluminum	45*25*1.4*2610	Taizhou		powder coating	
6	YJLD-014	Support pipe1	3	Aluminum	⌀25*1.4*640	Taizhou		powder coating	
7	YJLD-160	Support pipe2	2	Aluminum	24*14*1.2*680	Taizhou		powder coating	
8	YJLD-518	Adjust tube vertical pipe	2	Aluminum	20*20*1.2*435	Taizhou		powder coating	
9	YJLD-518	Adjust tube horizontal tube	1	Aluminum	20*20*1.2*450	Taizhou		powder coating	

GENERAL TOLERANCES: L $^{+40mm}_{-0mm}$ W ±10mm H ±10mm

Rev	NAME	DATE
01		
02		
03		
04		
05		
06		

MATERIAU/FINISHING:

TITRE:

SUNBED NATERIAL NINKASI ALU TEXTILENE 2X2 DARK GREY

No. DE PLAN 3276007943115

A3

REVISION

ECHELLE: 1:1 (Scale can be adapted) Dimensions in mm FEUILLE 1 SUR 1